NEMA 12 Frames (C3 Series)



- FRAME ONLY -
PANEL RAILS
NOT INCLUDED

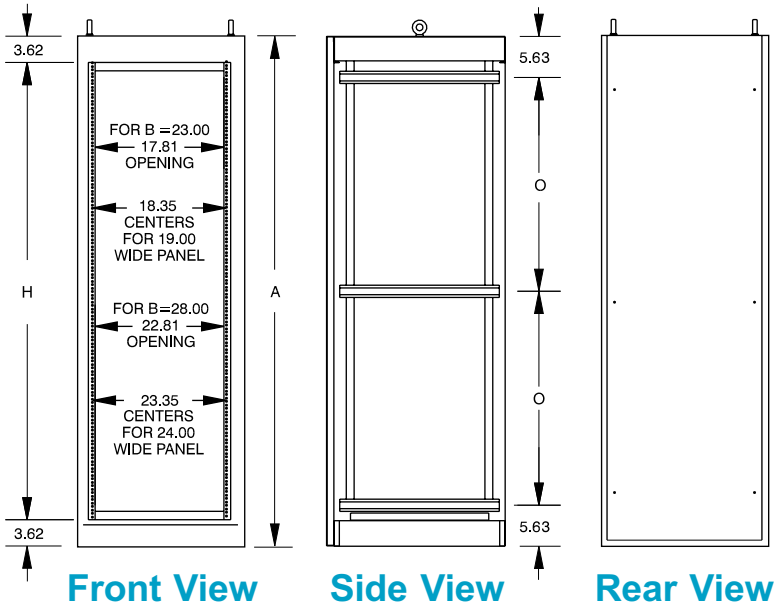

Front View **Side View** **Rear View** (optional cover installed)

19” Extra Wide NEMA 12 Rack Cabinet

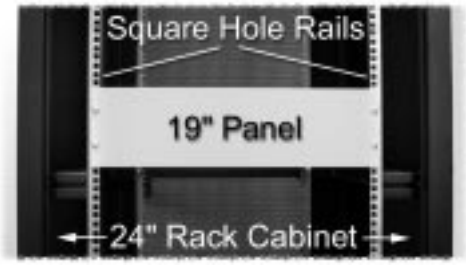

By using our 24” to 19” rail width adaptors (page 74) you can convert our 24” cabinets to 19” Extra Wide Panel Mount

This additional space allows for large bundles of wire that would not fit in standard 19” rack cabinets

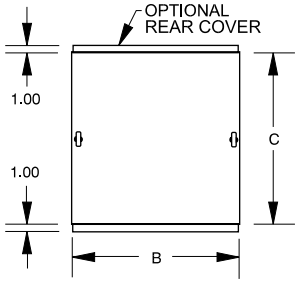

Top View

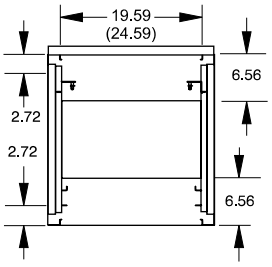

Bottom View

Hammond Manufacturing Co. Ltd.
394 Edinburgh Rd. North
Guelph, Ontario N1H 1E5 CANADA
Phone: 519-822-2960 Fax: 519-822-0715

www.hammondmfg.com

Hammond Manufacturing Co. Inc.
256 Sonwil Dr.
Cheektowaga, NY 14225 USA
Phone: 716-651-0086 Fax: 716-651-0726

FEATURES

- NEMA 12 rated - ideal for use in harsh factory floor situations
- CSA & UL listed
- Oil resistant gaskets are permanently secured on all openings
- Sides and doors are easily removable for easy internal access
- Heavy duty - welded rack (1,500 lb even load rating)
- Choice of standard 19” panel width (23” overall) or 24" panel width (28" overall)
- **By using panel width adaptors (page 74) - this system can be converted to 19” rack mount with extra wiring area on both sides of equipment. Allows space for vertical cable managers (page 96)**
- Choice of two depths:
  - usable depth of 21.63" (23.63” overall)
  - usable depth of 29.50" (31.50” overall)
- Unit is shipped as welded frame only with 4 levelling feet
- **Panel rails are *NOT* included** allows maximum flexibility of panel rail quantity & options (ie..tapped or square hole)
- Heavy duty: 14 gauge steel frame
- Frame ships with reinforced lifting eyes
- Finished in a rugged, textured beige powder paint
- See ordering guide (next page)

19” Rack Mount Versions

23.63” Deep (Usable Depth = 21.63”)

Part Number	Panel Width	Panel Height		Overall Dimensions (Inches)				Strut Center
		Inches	Units	A	B	Depth	H	O
C3F196323CG1	19.00	63	36	70.31	23.00	23.63	63.06	29.50
C3F197023CG1	19.00	70	40	77.31	23.00	23.63	70.06	33.00
C3F197823CG1	19.00	78	45	86.06	23.00	23.63	78.81	37.38

31.5” Deep (Usable Depth = 29.5”)

Part Number	Panel Width	Panel Height		Overall Dimensions (Inches)				Strut Center
		Inches	Units	A	B	Depth	H	O
C3F196331CG1	19.00	63	36	70.31	23.00	31.50	63.06	29.50
C3F197031CG1	19.00	70	40	77.31	23.00	31.50	70.06	33.00
C3F197831CG1	19.00	78	45	86.06	23.00	31.50	78.81	37.38

24” Rack Mount Versions

23.63” Deep (Usable Depth = 21.63”)

Part Number	Panel Width	Panel Height		Overall Dimensions (Inches)				Strut Center
		Inches	Units	A	B	Depth	H	O
C3F246323CG1	24.00	63	36	70.31	28.00	23.63	63.06	29.50
C3F247023CG1	24.00	70	40	77.31	28.00	23.63	70.06	33.00
C3F247823CG1	24.00	78	45	86.06	28.00	23.63	78.81	37.38

31.5” Deep (Usable Depth = 29.5”)

Part Number	Panel Width	Panel Height		Overall Dimensions (Inches)				Strut Center
		Inches	Units	A	B	Depth	H	O
C3F246331CG1	24.00	63	36	70.31	28.00	31.50	63.06	29.50
C3F247031CG1	24.00	70	40	77.31	28.00	31.50	70.06	33.00
C3F247831CG1	24.00	78	45	86.06	28.00	31.50	78.81	37.38

Hammond Manufacturing Co. Ltd.
394 Edinburgh Rd. North
Guelph, Ontario N1H 1E5 CANADA
Phone: 519-822-2960 Fax: 519-822-0715

www.hammondmfg.com

Hammond Manufacturing Co. Inc.
256 Sonwil Dr.
Cheektowaga, NY 14225 USA
Phone: 716-651-0086 Fax: 716-651-0726

Ordering Guide - NEMA 12 (C3 Series)

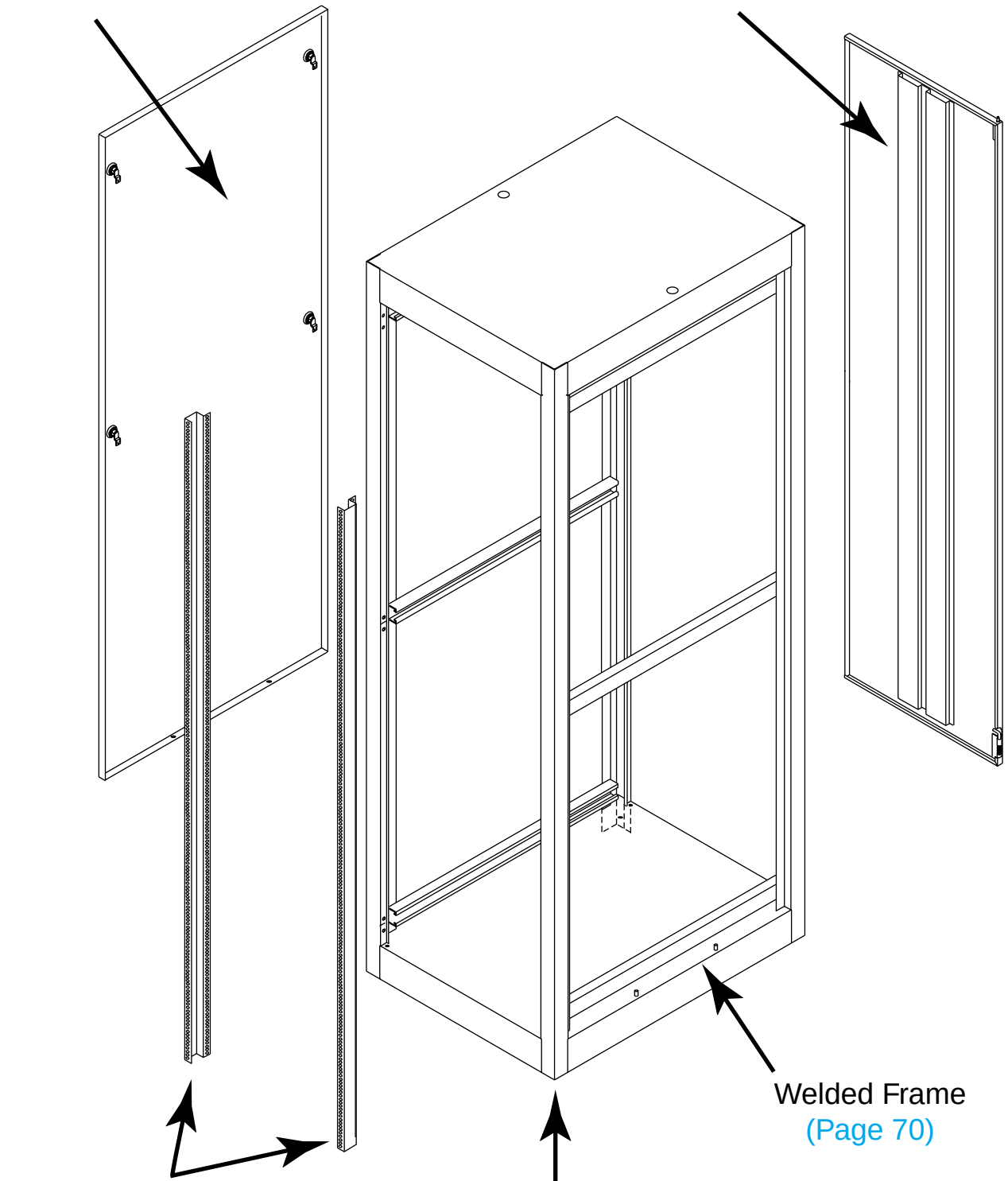

Hammond Manufacturing Co. Ltd.
394 Edinburgh Rd. North
Guelph, Ontario N1H 1E5 CANADA
Phone: 519-822-2960 Fax: 519-822-0715

www.hammondmfg.com

Hammond Manufacturing Co. Inc.
256 Sonwil Dr.
Cheektowaga, NY 14225 USA
Phone: 716-651-0086 Fax: 716-651-0726

TAPPED RAILS

- **SOLD IN PAIRS**
- Drilled and tapped (10-32)
- Heavy duty construction - formed from 10 gauge steel
- Full EIA hole centers (5/8 - 5/8 - 1/2 inch spacing)
- Bolts vertically in rack to amhal struts
- Includes strut mounting hardware, panel mounting hardware available on page 119
- Zinc plated finish
- Front of rail allows for 19” or 24” panel rack mounting (depending on the width of the cabinet frame ordered)
- By using panel width adaptors (next page) - the 24” rack mount frames can be converted to 19” rack mount with extra wiring area on both sides of equipment
- Rear of rail flange for rear support or accessory mounting



Part Number (Sold in Pairs)	Panel Height	
	Inches	Units
CCR35TZPL	35.00	20
CCR42TZPL	42.00	24
CCR49TZPL	49.00	28
CCR56TZPL	56.00	32
CCR63TZPL	63.00	36
CCR70TZPL	70.00	40
CCR78TZPL	78.75	45
CCR85TZPL	85.75	49

SQUARE HOLE RAILS

- **SOLD IN PAIRS**
- Square hole punched - allowing choice of hardware for 10-32 or 12-24 or M6 thread cage nuts), Full EIA hole centers (5/8 - 5/8 - 1/2 inch spacing)
- Includes a starter quantity (25) of 10-32 cage nuts
- Heavy duty construction - formed from 12 gauge steel, zinc plated finish
- Bolts vertically in rack to amhal struts
- Includes strut mounting hardware, panel mounting hardware available on page 119
- Front of rail allows for 19” or 24” panel rack mounting (depending on the width of the cabinet frame ordered)
- By using panel width adaptors (next page) - the 24” rack frames can be converted to 19” rack mount with extra wiring area on both sides of equipment
- 23” mount rails ONLY work in 24” rack cabinet frames
- Rear "L" of rail for rear support or accessory mounting



Part Number (Sold in Pairs)	Panel Height	
	Inches	Units
CPR35SZPL	35.00	20
CPR42SZPL	42.00	24
CPR49SZPL	49.00	28
CPR56SZPL	56.00	32
CPR63SZPL	63.00	36
CPR70SZPL	70.00	40
CPR78SZPL	78.75	45
CPR85SZPL	85.75	49

23” Mount Rails

Part Number (Sold in Pairs)	Panel Height	
	Inches	Units
CPR2370SZPL	70.00	40
CPR2378SZPL	78.75	45



Cage Nut Installation Tool

- Allows for easy installation of cage nuts in square rail hole
- Spring steel tool
- Part Number **RCNIT**



Additional Cage Nuts

Part Number	Qty. Per Package	Thread
1421CNA25	25	10-32
1421CNA100	100	10-32
1421CNC25	25	12-24
1421CNC100	100	12-24
1421CNB25	25	M6
1421CNB100	100	M6

Width Adaptors & Side Panels (C3 Series)

RAIL WIDTH ADAPTORS
(24” Rack Frames ONLY)



- **NOT REQUIRED FOR 19” RACK FRAMES**
- **SOLD IN SETS OF 6 - ENOUGH FOR ONE PAIR OF RAILS**
- Converts 24” rack cabinets to 19” rack mount (extra wide)
- Provides additional wiring space along both sides of 19" rack mounted equipment
- Allows space for vertical cable managers (page 96)
- Fits between panel rail and three horizontal channels (amhal struts)
- Constructed of black anodized extruded aluminum
- Kit includes six adaptor brackets, extender bolts and washers - required hardware for one pair of rails
- Part Number **CAK1924**

SIDE PANELS



- **SOLD IN PAIRS**
- Constructed of 16 gauge steel
- Panels fit flush with frame
- Features quick release 1/4 turn cam fasteners providing a tight seal against gasket on the frame
- Finished in beige textured powder paint (matches frame)

For 23.63” Deep Frame

Part Number	Rack Depth (Inches)	Panel Height		Use With Frame Part Number
		Inches	Units	
C3SP6323CG1	23.63	63	36	C3F196323CG1 or C3F246323CG1
C3SP7023CG1	23.63	70	40	C3F197023CG1 or C3F247023CG1
C3SP7823CG1	23.63	78	45	C3F197823CG1 or C3F247823CG1

For 31.5” Deep Frame

Part Number	Rack Depth (Inches)	Panel Height		Use With Frame Part Number
		Inches	Units	
C3SP6331CG1	31.50	63	36	C3F196331CG1 or C3F246331CG1
C3SP7031CG1	31.50	70	40	C3F197031CG1 or C3F247031CG1
C3SP7831CG1	31.50	78	45	C3F197831CG1 or C3F247831CG1



- For higher security, the quarter turn fasteners on the side panels can be replaced with this key locking version
- Order part number **C3SPQTRL**
- Kit contains 4 quarter turn locks and 8 keys.
- Good for 1 rack (ie...2 locks per side panel)

Hammond Manufacturing Co. Ltd.
394 Edinburgh Rd. North
Guelph, Ontario N1H 1E5 CANADA
Phone: 519-822-2960 Fax: 519-822-0715

www.hammondmfg.com

Hammond Manufacturing Co. Inc.
256 Sonwil Dr.
Cheektowaga, NY 14225 USA
Phone: 716-651-0086 Fax: 716-651-0726

CASTER BASE ASSEMBLY

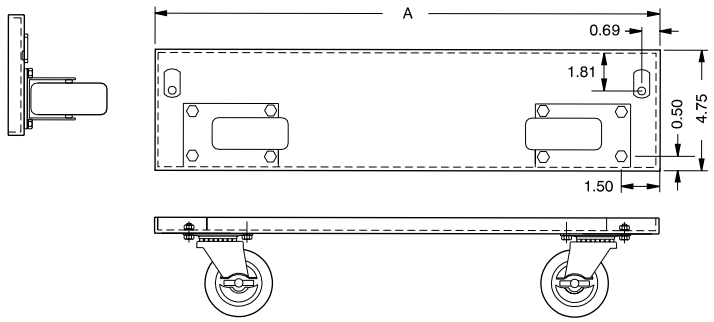

- Casters and adaptor base provide heavy duty caster capability
- Complete assembly with four casters, mounts to rack frame without drilling
- 3” non-static rockite caster wheels with ball bearing pivots
- 1,080 lb. Mfg's specified weight capacity
- Not compatible with plinth (below)
- Hardware included

For 19” Rack Mount Frames

Part Number	A
C3CRS19	19.88

For 24” Rack Mount Frames

Part Number	A
C3CRS24	24.88

LOCKING CASTERS

- These are exterior mount casters that mount outside of rack frame perimeter to allow foot access of locking pedals
- **Medium Duty** - 560# Mfg's specified weight capacity (Set of 4)
- Available in either locking or non-locking format
- Sold in **pairs** allowing for mix of locking and nonlocking on same cabinet
- 3.5” diameter wheels add 4.88” to cabinet height
- No drilling required as casters fit into built-in caster mounts
- Part Number **CCSTL** for a PAIR of locking casters
- Part Number **CCSTN** for a PAIR of non-locking casters



PLINTH

- Adds 4” to overall rack height
- 14 gauge steel construction
- Features 4 corner units and 4 removable fill panels
- By removing both front & rear panels, easy access to bottom cabling and forklift lifting/transport are achieved
- Not compatible with levelling feet or casters

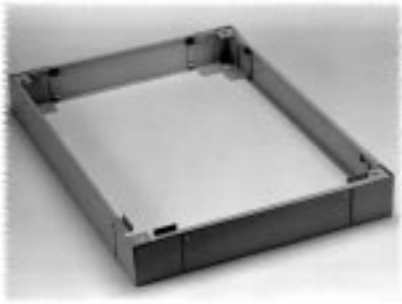

For 19” Rack Mount Frames

Part Number		Panel Width	Use with Frame Depth
Black Textured	Beige Textured		
CPL19423BK1	CPL19423CG1	19"	23.63"
CPL19431BK1	CPL19431CG1	19"	31.50"

For 24” Rack Mount Frames

Part Number		Panel Width	Use with Frame Depth
Black Textured	Beige Textured		
CPL24423BK1	CPL24423CG1	24"	23.63"
CPL24431BK1	CPL24431CG1	24"	31.50"

BOLT DOWN KIT

- Fixes rack to floor
- Kit includes set of four - 3/8” x 5 1/2” bolts with flat washers and nuts
- Can be used with or without plinths
- Part Number: **CBDK4**

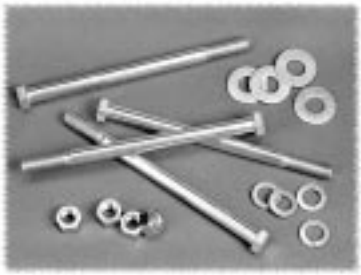

Hammond Manufacturing Co. Ltd.
394 Edinburgh Rd. North
Guelph, Ontario N1H 1E5 CANADA
Phone: 519-822-2960 Fax: 519-822-0715

www.hammondmfg.com

Hammond Manufacturing Co. Inc.
256 Sonwil Dr.
Cheektowaga, NY 14225 USA
Phone: 716-651-0086 Fax: 716-651-0726

SOLID DOOR



- Heavy Duty 14 gauge steel construction
- Smooth action handle provides solid NEMA 12 seal
- Quick release hinge design allows for easy removal
- Can be used on front or rear of frame
- Allows full access to space between panel rails when open
- Finish matches “C3” type rack frame in the same rugged beige textured powder paint

For 19” Rack Mount Frames

Part Number	Panel Height		Use With Frame Part Number
	Inches	Units	
C3DS1963HCG1	63	36	C3F196323CG1 or C3F196331CG1
C3DS1970HCG1	70	40	C3F197023CG1 or C3F197031CG1
C3DS1978HCG1	78	45	C3F197823CG1 or C3F197831CG1

For 24” Rack Mount Frames

Part Number	Panel Height		Use With Frame Part Number
	Inches	Units	
C3DS2463HCG1	63	36	C3F246323CG1 or C3F246331CG1
C3DS2470HCG1	70	40	C3F247023CG1 or C3F247031CG1
C3DS2478HCG1	78	45	C3F247823CG1 or C3F247831CG1

PLEXI - GLASS DOOR



- Surface mount
- UL/CSA listed polycarbonate window
- Heavy Duty 14 gauge steel frame construction
- Slimline handle design allows maximum window viewing area & provides a solid NEMA 12 seal
- Quick release hinge design allows for easy removal
- Can be used on front or rear of frame
- Allows full access to space between panel rails when open
- Frame matches “C3” type rack frame in the same rugged beige textured powder paint finish

For 19” Rack Mount Frames

Part Number	Panel Height		Use With Frame Part Number
	Inches	Units	
C3DS1963PCG1	63	36	C3F196323CG1 or C3F196331CG1
C3DS1970PCG1	70	40	C3F197023CG1 or C3F197031CG1
C3DS1978PCG1	78	45	C3F197823CG1 or C3F197831CG1

For 24” Rack Mount Frames

Part Number	Panel Height		Use With Frame Part Number
	Inches	Units	
C3DS2463PCG1	63	36	C3F246323CG1 or C3F246331CG1
C3DS2470PCG1	70	40	C3F247023CG1 or C3F247031CG1
C3DS2478PCG1	78	45	C3F247823CG1 or C3F247831CG1

Hammond Manufacturing Co. Ltd.
394 Edinburgh Rd. North
Guelph, Ontario N1H 1E5 CANADA
Phone: 519-822-2960 Fax: 519-822-0715

www.hammondmfg.com

Hammond Manufacturing Co. Inc.
256 Sonwil Dr.
Cheektowaga, NY 14225 USA
Phone: 716-651-0086 Fax: 716-651-0726

QUARTER TURN - LATCHING SOLID DOOR



- Surface mount
- Heavy Duty 14 gauge steel construction
- 3 quarter turn latches provide solid NEMA 12 seal
- Latches are close to door edge allowing for maximum door mounting area
- Quick release hinge design allows for easy removal
- Can be used on front or rear of frame
- Allows full access to space between panel rails when open
- Finish matches “C3” type rack frame in the same rugged beige textured powder paint

For 19” Rack Mount Frames

Part Number	Panel Height		Use With Frame Part Number
	Inches	Units	
C3DS1963QCG1	63	36	C3F196323CG1 or C3F196331CG1
C3DS1970QCG1	70	40	C3F197023CG1 or C3F197031CG1
C3DS1978QCG1	78	45	C3F197823CG1 or C3F197831CG1

For 24” Rack Mount Frames

Part Number	Panel Height		Use With Frame Part Number
	Inches	Units	
C3DS2463QCG1	63	36	C3F246323CG1 or C3F246331CG1
C3DS2470QCG1	70	40	C3F247023CG1 or C3F247031CG1
C3DS2478QCG1	78	45	C3F247823CG1 or C3F247831CG1

SOLID SURFACE COVER



- Surface mount
- 16 gauge steel construction
- Screws to frame to provide a solid NEMA 12 seal
- Normally used to cover & seal the rear of the rack
- Finish matches “C3” type rack frame in the same rugged beige textured powder paint

For 19” Rack Mount Frames

Part Number	Panel Height		Use With Frame Part Number
	Inches	Units	
C3CS1963SCG1	63	36	C3F196323CG1 or C3F196331CG1
C3CS1970SCG1	70	40	C3F197023CG1 or C3F197031CG1
C3CS1978SCG1	78	45	C3F197823CG1 or C3F197831CG1

For 24” Rack Mount Frames

Part Number	Panel Height		Use With Frame Part Number
	Inches	Units	
C3CS2463SCG1	63	36	C3F246323CG1 or C3F246331CG1
C3CS2470SCG1	70	40	C3F247023CG1 or C3F247031CG1
C3CS2478SCG1	78	45	C3F247823CG1 or C3F247831CG1

RACK JOINING KIT

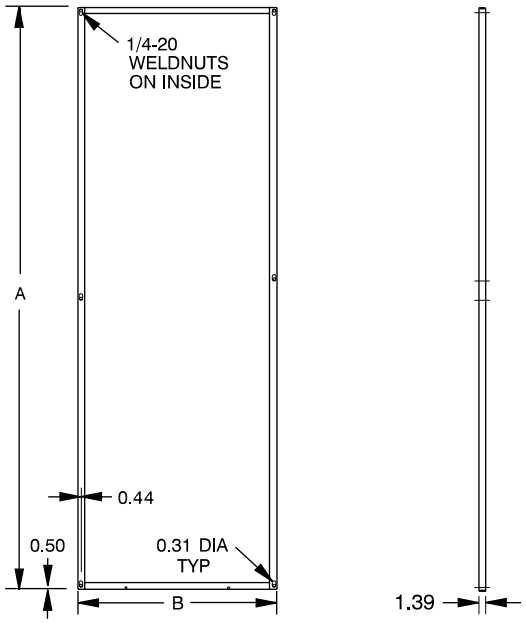

- Easily installed joining kit provides alignment and strength for modular multi-bay installations
- Finish matches “C3” type rack frame in the same rugged beige textured powder paint
- When installed properly, this kit maintains UL/CSA NEMA 12 listing

For 23.63” Deep Frame

Part Number	Panel Height		Use With Frame Part Number
	Inches	Units	
C3JK6323	63	36	C3F196323CG1 or C3F246323CG1
C3JK7023	70	40	C3F197023CG1 or C3F247023CG1
C3JK7823	78	45	C3F197823CG1 or C3F247823CG1

For 31.5” Deep Frame

Part Number	Panel Height		Use With Frame Part Number
	Inches	Units	
C3JK6331	63	36	C3F196331CG1 or C3F246331CG1
C3JK7031	70	40	C3F197031CG1 or C3F247031CG1
C3JK7831	78	45	C3F197831CG1 or C3F247831CG1

DON’T FORGET TO CHECK OUT OUR UNIVERSAL ACCESSORY SECTION - NEXT PAGE

Hammond Manufacturing Co. Ltd.
394 Edinburgh Rd. North
Guelph, Ontario N1H 1E5 CANADA
Phone: 519-822-2960 Fax: 519-822-0715

www.hammondmfg.com

Hammond Manufacturing Co. Inc.
256 Sonwil Dr.
Cheektowaga, NY 14225 USA
Phone: 716-651-0086 Fax: 716-651-0726

©