PART No. C3RWT636

for more information visit

www.hammfg.com

Data subject to change without notice

Isometric drawing Not to Scale

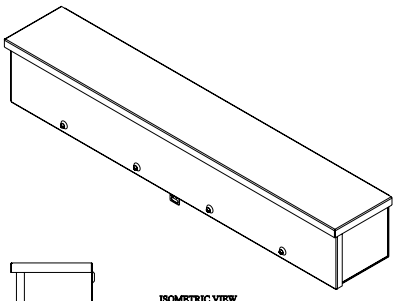

ISOMETRIC VIEW

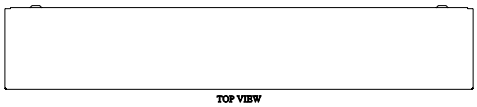

TOP VIEW

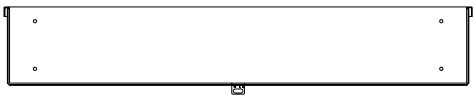

REAR VIEW

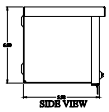

SIDE VIEW

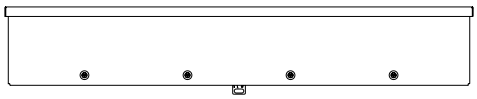

FRONT VIEW



SIDE VIEW



BOTTOM VIEW