PART No. C3RWT1272

for more information visit
www.hammfg.com
Data subject to change without notice

Isometric drawing Not to Scale

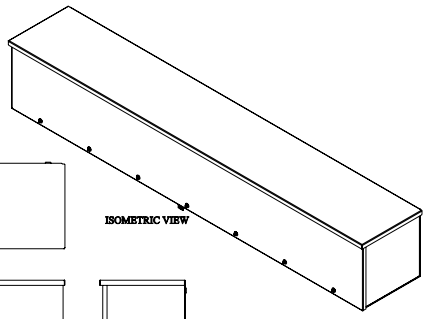
ISOMETRIC VIEW


TOP VIEW

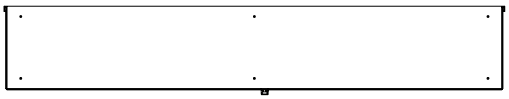
REAR VIEW

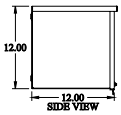

SIDE VIEW

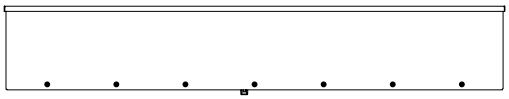
FRONT VIEW


SIDE VIEW



BOTTOM VIEW