PART No. C3R303012SC

for more information visit

www.hammfg.com

Data subject to change without notice

Isometric drawing Not to Scale

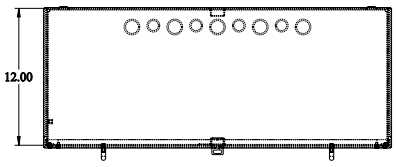

TOP VIEW

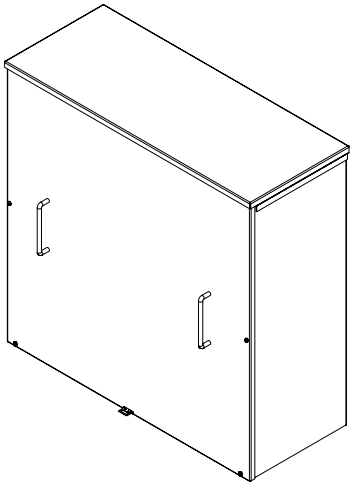

ISOMETRIC VIEW

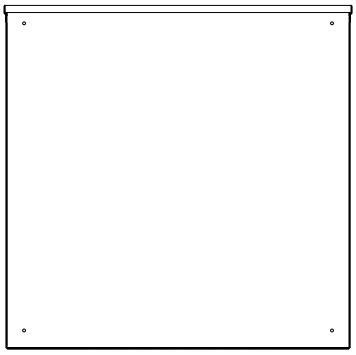

BACK VIEW

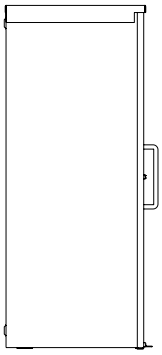

LEFT SIDE VIEW

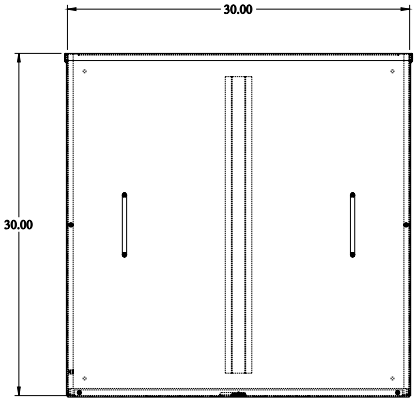

FRONT VIEW

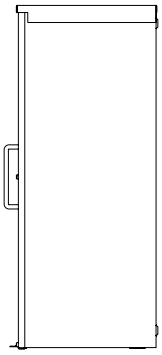

RIGHT SIDE VIEW

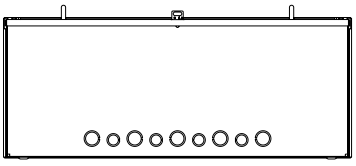

BOTTOM VIEW