PART No. C3R20166HCR

for more information visit

www.hammfg.com

Data subject to change without notice

Isometric drawing Not to Scale

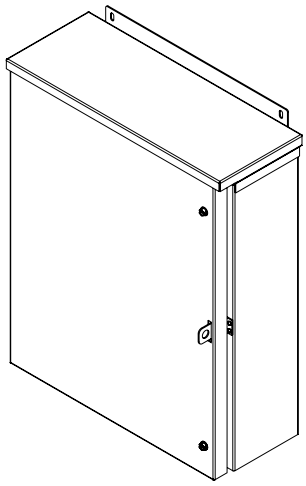

ISOMETRIC VIEW

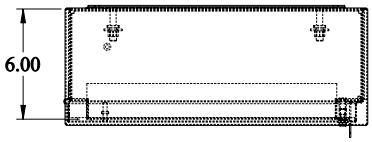

TOP VIEW

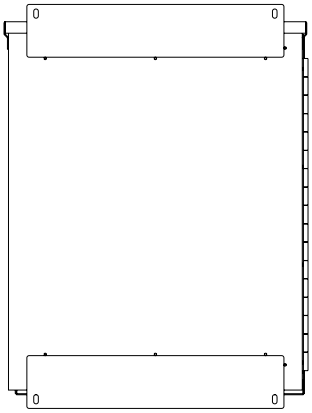

BACK VIEW

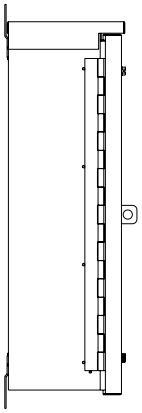

LEFT SIDE VIEW

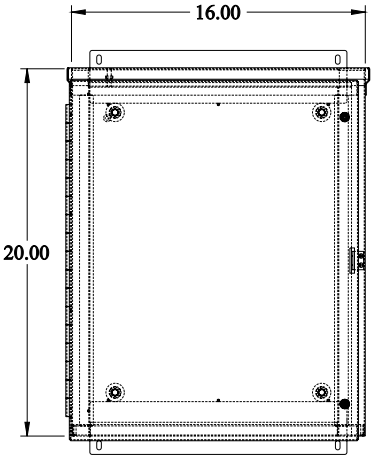

FRONT VIEW

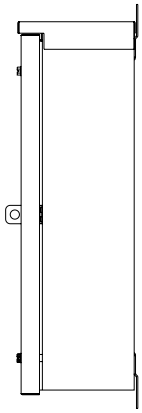

RIGHT SIDE VIEW

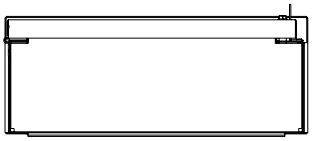

BOTTOM VIEW