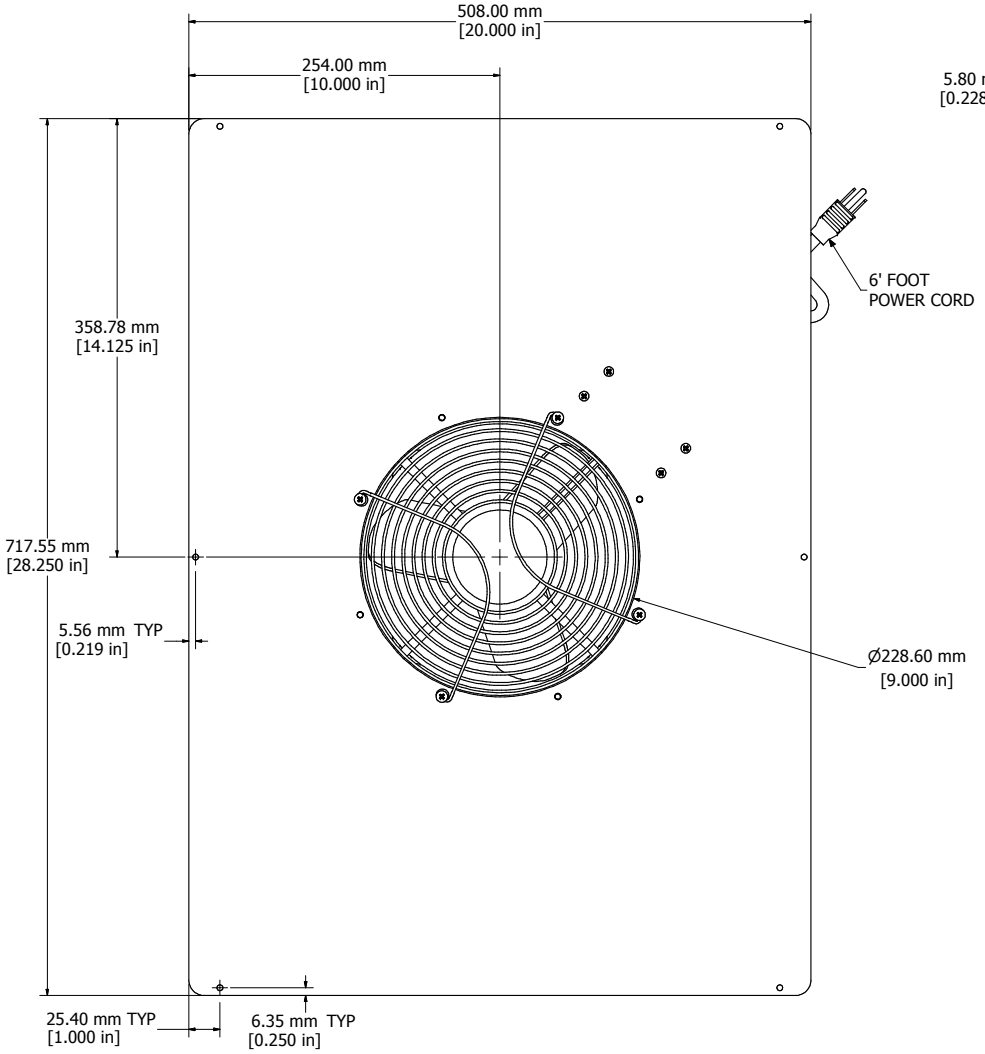

ASSEMBLY - VIEW FROM TOP

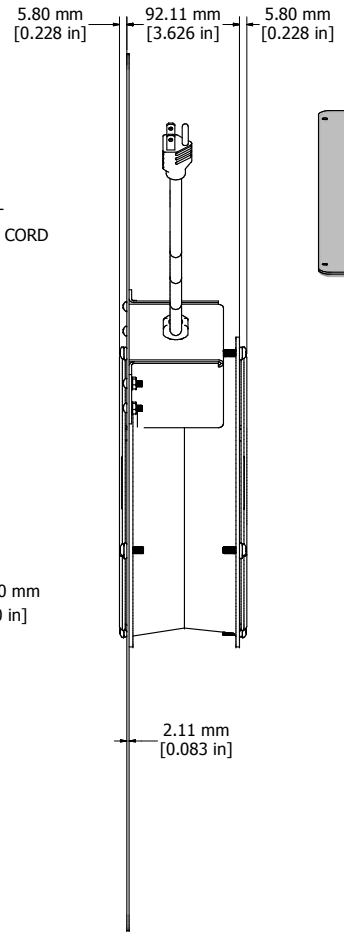

ASSEMBLY - VIEW FROM SIDE



ISOMETRIC VIEW

C2T1936F10
Finish - Top - Painted Steel
- Finger Guard - Chrome Plated
Rated - 115 VAC, 50/60 Hz, 0.29 Amps
Free Flow Air Delivery - 550 CFM
Approvals - cURus Recognized UL507 and CSA C22.2 No.113
COLOURS
Black - C2T1936F10BK1
Beige - C2T1936F11CG1
Light Grey - C2T1936F10LG1
HARDWARE
6 Screws - RoundHead 8-32 x 1/2"
6 Speed Nuts

HAMMOND MANUFACTURING™

C2T1936F10

www.hammondmfg.com