# ROBUST VARIETY







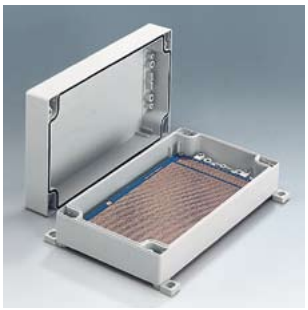

One-colored
Light gray, RAL 7035

Accessory
cover strips in
Silver gray, RAL 7001
Red, RAL 3020
Yellow, RAL 1023
Green, RAL 6024
Blue, RAL 5017





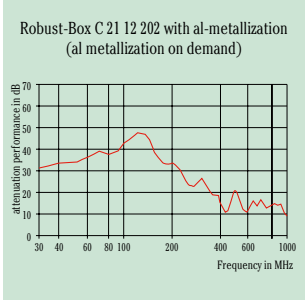


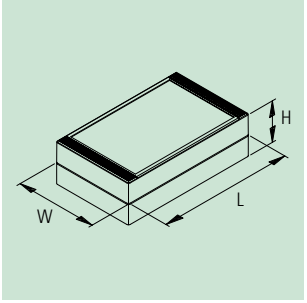


## THE PRODUCT

Conceived as a dual case system, the ROBUST-BOX range offers a variety of installation options.

Both case shells are equipped with premolded threads. You as the user can now decide whether the flat or the high part of the case is to be used as the bottom part.

## YOUR ADVANTAGE

Two standard materials (UL 94 HB):
ABS – approved as a terminal mounting case or in Polycarbonate – a solid and robust case, with high heat resistance for use in adverse environments.

Easy-assembly construction. The case shells can be used as either top or base section.

The cover fixings are outside of the sealed area. The fixing screws are rust proof and captured in the cover.

There is an area recessed by min. 0.031" for the mounting of membrane keyboards.

Colorful cover strips for coding (as an alternative to the standard version in light gray).

Applicable as desktop case and wall mounting case.

## APPLICATIONS

This case system is especially suitable for a wide range of **electric installations**, e.g. heating, climate, ventilation, machine building and construction units.

But it can also be used in the **electronics sector**, e.g. as push-button case, for controllers, sensors in the interior etc.

## PROTECTION CLASS IP 66

With sealing (supplied with the case).



Subject to technical modification without notice. Typographical and other errors do not justify any claim for damages.
Stand: 10/09 usa Copyright © 2009 OKW Gehäusesysteme

## ROBUST-BOX WIDTH 3.150"

Outside dim. in inches

| Length | Width | Height |
|---|---|---|
| 3.150 | 3.150 | 2.362/3.150 |
| 4.724 | 3.150 | 2.362/3.150 |
| 6.299 | 3.150 | 2.362/3.150 |
| 9.449 | 3.150 | 2.362/3.150 |

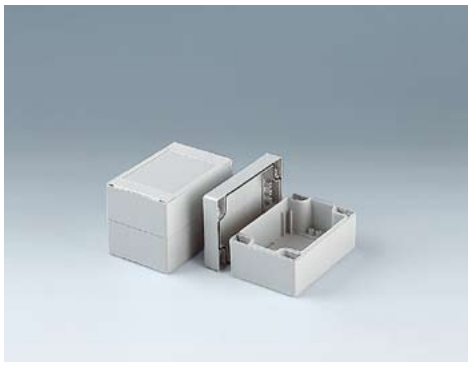



## ROBUST-BOX WIDTH 4.724"

Outside dim. in inches

| Length | Width | Height |
|---|---|---|
| 4.724 | 4.724 | 2.362/3.543 |
| 7.874 | 4.724 | 2.362/3.543 |
| 9.449 | 4.724 | 2.362/3.543 |

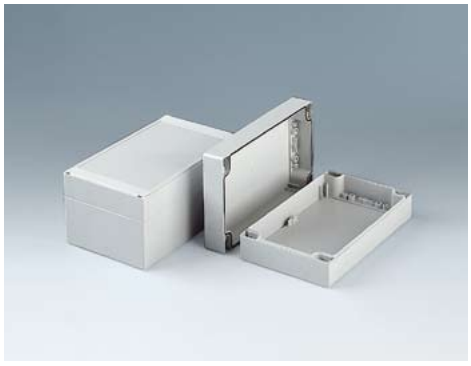



## ROBUST-BOX WIDTH 6.299"

Outside dim. in inches

| Length | Width | Height |
|---|---|---|
| 6.299 | 6.299 | 2.362/3.543 |
| 9.449 | 6.299 | 2.362/3.543 |
| 9.449 | 6.299 | 4.724 |





## ROBUST-BOX WIDTH 7.874"

Outside dim. in inches

| Length | Width | Height |
|---|---|---|
| 11.811 | 7.874 | 3.150/4.724/6.299 |

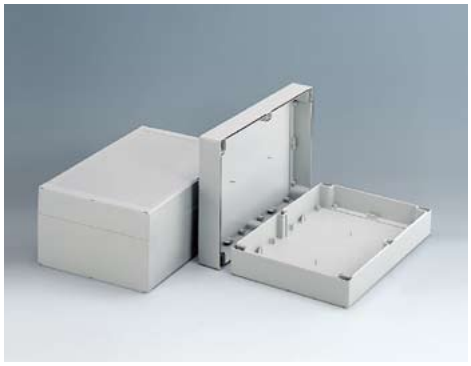



## ROBUST-BOX WIDTH 9.449"

Outside dim. in inches

| Length | Width | Height |
|---|---|---|
| 14.173 | 9.449 | 3.150/4.724/6.299 |





# ROBUST-BOX

## COMPLETE ENCLOSURES*1

| Part-No. version I (ABS) | Part-No. version II (PC) | ROBUST-BOX | Outside dim. in inches L | W | H | Equipment (dim. in inches) max. size of PCB*2 shell "T" | max. size of PCB*2 shell "G" | dim. keypad |
|---|---|---|---|---|---|---|---|---|
| C 20 08 081 | C 20 08 082 | width 3.150" | 3.150 | 3.150 | 2.362 | 1.575 x 2.559 | 1.575 x 2.559 | 1.681 x 2.583 |
| C 21 08 081 | C 21 08 082 | | 3.150 | 3.150 | 3.150 | 1.575 x 2.559 | 1.575 x 2.559 | 1.681 x 2.583 |
| C 20 08 121 | C 20 08 122 | | 4.724 | 3.150 | 2.362 | 3.150 x 2.559 | 3.150 x 2.559 | 3.254 x 2.583 |
| C 21 08 121 | C 21 08 122 | | 4.724 | 3.150 | 3.150 | 3.150 x 2.559 | 3.150 x 2.559 | 3.254 x 2.583 |
| C 20 08 161 | C 20 08 162 | | 6.299 | 3.150 | 2.362 | 4.724 x 2.559 | 4.724 x 2.559 | 4.827 x 2.585 |
| C 21 08 161 | C 21 08 162 | | 6.299 | 3.150 | 3.150 | 4.724 x 2.559 | 4.724 x 2.559 | 4.827 x 2.585 |
| C 20 08 241 | C 20 08 242 | | 9.449 | 3.150 | 2.362 | 7.874 x 2.559 | 7.874 x 2.559 | 7.980 x 2.583 |
| C 21 08 241 | C 21 08 242 | | 9.449 | 3.150 | 3.150 | 7.874 x 2.559 | 7.874 x 2.559 | 7.980 x 2.583 |
| C 20 12 121 | C 20 12 122 | width 4.724" | 4.724 | 4.724 | 2.362 | 3.150 x 4.134 | 3.150 x 4.134 | 3.256 x 4.154 |
| C 21 12 121 | C 21 12 122 | | 4.724 | 4.724 | 3.543 | 3.150 x 4.134 | 3.150 x 4.134 | 3.256 x 4.154 |
| C 20 12 201 | C 20 12 202 | | 7.874 | 4.724 | 2.362 | 6.299 x 4.134 | 6.299 x 4.134 | 6.402 x 4.154 |
| C 21 12 201 | C 21 12 202 | | 7.874 | 4.724 | 3.543 | 6.299 x 4.134 | 6.299 x 4.134 | 6.402 x 4.154 |
| C 20 12 241 | C 20 12 242 | | 9.449 | 4.724 | 2.362 | 7.874 x 4.134 | 7.874 x 4.134 | 7.978 x 4.150 |
| C 21 12 241 | C 21 12 242 | | 9.449 | 4.724 | 3.543 | 7.874 x 4.134 | 7.874 x 4.134 | 7.978 x 4.150 |
| C 20 16 161 | C 20 16 162 | width 6.299" | 6.299 | 6.299 | 2.362 | 4.724 x 5.709 | 4.724 x 5.709 | 4.827 x 5.728 |
| C 21 16 161 | C 21 16 162 | | 6.299 | 6.299 | 3.543 | 4.724 x 5.709 | 4.724 x 5.709 | 4.827 x 5.728 |
| C 20 16 241 | C 20 16 242 | | 9.449 | 6.299 | 2.362 | 7.874 x 5.709 | 7.874 x 5.709 | 7.972 x 5.728 |
| C 21 16 241 | C 21 16 242 | | 9.449 | 6.299 | 3.543 | 7.874 x 5.709 | 7.874 x 5.709 | 7.972 x 5.734 |
| C 24 16 241 | C 24 16 242 | | 9.449 | 6.299 | 4.724 | 7.874 x 5.591 | 7.992 x 5.866 | 7.972 x 5.728 |
| C 21 20 301 | – | width 7.874" | 11.811 | 7.874 | 3.150 | 10.472 x 6.575 | 10.394 x 6.614 | 10.339 x 6.762 |
| C 24 20 301 | – | | 11.811 | 7.874 | 4.724 | 10.472 x 6.496 | 10.394 x 6.614 | 10.339 x 6.762 |
| C 25 20 301 | – | | 11.811 | 7.874 | 6.299 | 10.472 x 6.496 | 10.394 x 6.575 | 10.339 x 6.762 |
| C 21 24 361 | – | width 9.449" | 14.173 | 9.449 | 3.150 | 12.874 x 8.150 | 12.795 x 8.189 | 12.713 x 8.343 |
| C 24 24 361 | – | | 14.173 | 9.449 | 4.724 | 12.874 x 8.071 | 12.795 x 8.189 | 12.713 x 8.343 |
| C 25 24 361 | – | | 14.173 | 9.449 | 6.299 | 12.835 x 8.071 | 12.756 x 8.150 | 12.713 x 8.343 |

## SEPARATE PARTS (SINGLE PIECES)

| Shell width 3.150", ABS RAL 7035 T (H = 1.575") | G (H = 0.787") | G (H = 1.575") | Shell width 3.150", PC RAL 7035 T (H = 1.575") | G (H = 0.787") | G (H = 1.575") | L x W in inches |
|---|---|---|---|---|---|---|
| C 10 80 801 | C 00 80 801 | C 20 80 801 | C 10 80 802 | C 00 80 802 | C 20 80 802 | 3.150 x 3.150 |
| C 10 81 201 | C 00 81 201 | C 20 81 201 | C 10 81 202 | C 00 81 202 | C 20 81 202 | 4.724 x 3.150 |
| C 10 81 601 | C 00 81 601 | C 20 81 601 | C 10 81 602 | C 00 81 602 | C 20 81 602 | 6.299 x 3.150 |
| C 10 82 401 | C 00 82 401 | C 20 82 401 | C 10 82 402 | C 00 82 402 | C 20 82 402 | 9.449 x 3.150 |

| Shell width 4.724", ABS RAL 7035 T (H = 1.181") | T (H = 2.362") | G (H = 1.181") | Shell width 4.724", PC RAL 7035 T (H = 1.181") | T (H = 2.362") | G (H = 1.181") | L x W in inches |
|---|---|---|---|---|---|---|
| C 01 21 201 | C 21 21 201 | C 11 21 201 | C 01 21 202 | C 21 21 202 | C 11 21 202 | 4.724 x 4.724 |
| C 01 22 001 | C 21 22 001 | C 11 22 001 | C 01 22 002 | C 21 22 002 | C 11 22 002 | 7.874 x 4.724 |
| C 01 22 401 | C 21 22 401 | C 11 22 401 | C 01 22 402 | C 21 22 402 | C 11 22 402 | 9.449 x 4.724 |

| Shell width 6.299", ABS RAL 7035 T (H = 1.181") | T (H = 2.362") | G (H = 1.181") | G (H = 2.362") | Shell width 6.299", PC RAL 7035 T (H = 1.181") | T (H = 2.362") | G (H = 1.181") | G (H = 2.362") | L x W in inches |
|---|---|---|---|---|---|---|---|---|
| C 01 61 601 | C 21 61 601 | C 11 61 601 | – | C 01 61 602 | C 21 61 602 | C 11 61 602 | – | 6.299 x 6.299 |
| C 01 62 401 | C 21 62 401 | C 11 62 401 | C 31 62 401 | C 01 62 402 | C 21 62 402 | C 11 62 402 | C 31 62 402 | 9.449 x 6.299 |

| Shell width 7.874", ABS RAL 7035 T (H = 1.575") | T (H = 3.150") | G (H = 1.575") | G (H = 3.150") | L x W in inches |
|---|---|---|---|---|
| C 12 03 001 | C 42 03 001 | C 22 03 001 | C 52 03 001 | 11.811 x 7.874 |

| Shell width 9.449", ABS RAL 7035 T (H = 1.575") | T (H = 3.150") | G (H = 1.575") | G (H = 3.150") | L x W in inches |
|---|---|---|---|---|
| C 12 43 601 | C 42 43 601 | C 22 43 601 | C 52 43 601 | 14.173 x 9.449 |

| For case shells width 3.150" | width 4.724" | width 6.299" | width 7.874" | width 9.449" | Accessories (only if separate parts are ordered) Article | |
|---|---|---|---|---|---|---|
| C 22 99 001 | C 22 99 001 | C 22 99 001 | – | – | Assembly kit | each 4 screws for the case assembly and for mounting PCBs |
| – | – | – | C 22 99 002 | C 22 99 002 | Assembly kit | each 6 screws for the case assembly + 8 for PCBs, centre covers |
| C 22 00 801 | C 22 01 201 | C 22 01 601 | C 22 02 001 | C 22 02 401 | Cover strips without holes | PC, light gray, RAL 7035, each 1 pc |
| C 22 10 801 | C 22 11 201 | C 22 11 601 | C 22 12 001 | C 22 12 401 | Cover strips with holes*3 | PC, light gray, RAL 7035, each 1 pc |

## ACCESSORIES (UNIVERSAL)

| Article | For enclosure ROBUST-BOX | Version / Application | Part-No. |
|---|---|---|---|
| ① Case feet | for all case sizes | simply snap-in*4 when using the case for desktop application, 4 pcs | C 22 99 018 |
| ② Wall mounting brackets | for all case sizes | for exterior wall mounting, 4 pcs incl. fixing screws | C 22 99 028 |
| ③ Securing hinge | width 3.150/4.724/6.299" | for securing the cover, e.g. during servicing, 2 pcs incl. fixing screws | C 22 99 031 |
| ④ Hinge | for all case sizes | additional machining (drilling) required, 2 complete hinges | C 22 99 088 |
| ⑤ PCB support | width 4.724" | for mounting pre-assembled PCB units, 2 pcs incl. fixing screws | C 22 99 058 |
| | width 3.150/6.299/7.874/9.449" | for mounting pre-assembled PCB units, 4 pcs incl. fixing screws | C 22 99 068 |
| ⑥ Security kit | width 3.150" | for use with lead tags, each 4 plugs, 2 cover strips with holes for the top in light gray | C 22 99 048 |
| | width 4.724" | | C 22 99 042 |
| | width 6.299" | | C 22 99 046 |
| | for all case sizes | plug as a single part, 1 plug | C 22 99 040 |

| Article | Version / Application | for ROBUST-BOX width 3.150" | width 4.724" | width 6.299" |
|---|---|---|---|---|
| ⑦ Fastening elements to DIN-Rails | according to DIN EN 60 715 TH35, 2 pcs + assembly kit | C 22 01 088 | C 22 03 128 | C 22 04 168 |
| ⑧ Cover strips (optionally supplied to the light gray colored standard versions, simply clip into top or base) | silver gray, RAL 7001, 2 pcs for the top, 2 pcs for the base*3 | C 22 01 082 | C 22 03 123 | C 22 04 162 |
| | red, RAL 3020, 2 pcs for the top, 2 pcs for the base*3 | C 22 01 084 | C 22 03 124 | C 22 04 164 |
| | yellow, RAL 1023, 2 pcs for the top, 2 pcs for the base*3 | C 22 01 085 | C 22 03 125 | C 22 04 165 |
| | green, RAL 6024, 2 pcs for the top, 2 pcs for the base*3 | C 22 01 086 | C 22 03 126 | C 22 04 166 |
| | blue, RAL 5017, 2 pcs for the top, 2 pcs for the base*3 | C 22 01 087 | C 22 03 127 | C 22 04 167 |




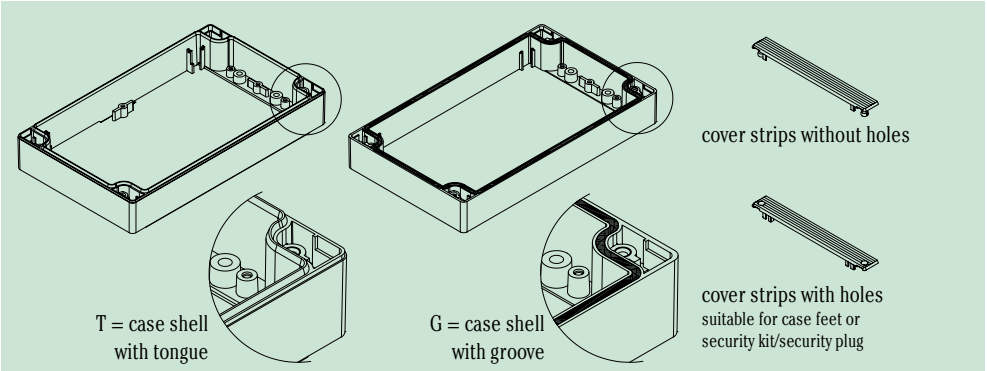


To achieve one ROBUST-BOX from separate parts, for a special combination, please order:

1 shell "T" (with tongue).
1 shell "G" (with groove).
1 assembly kit.
4 cover strips (table top applications) or 2 cover strips (wall mounting or DIN rail mounting).

*1 case assembly with 4 screws (width 3.150"/4.724"/6.299") and 6 screws (width 7.874"/9.449")
Supply: two case shells (one with tongue; one with groove and gasket), each two pairs of cover strips (2 for the top, 2 with holes for the base) in light gray and 1 assembly kit.

*2 L x W in inches. The dimensions were measured as clearance between the guide ridges (PCB assembly by means of PCB supports, accessories).
To assemble the PCBs on the fastening pillars side L (length) the PCBs must be approx. 1.181" longer (cutouts necessary on the 4 corners in accordance with the case screw fittings).

*3 cover strips with holes suitable for case feet or security kit/security plug (separate articles)

*4 because of levelling out the length's tolerance of the cover strips we recommend to glue the case feet of sizes 7.874" x 11.811" and 9.449" x 14.173"

**Important: With additional machining please indicate the parts "with or without groove".**

Information: ROBUST-BOX in PC with transparent top on demand.