C1005B-Series

THERMAL CIRCUIT PROTECTORS

The C1005B-Series offers the functionality of a switch and circuit breaker in a single compact package, which fits an industry standard .550 x 1.125 mounting hole. This combo device eliminates the need for both a switch and thermal circuit protector on customer panels. By using only this multipurpose product, wiring and assembly costs are greatly reduced, while at the same time, valuable panel real estate is saved.

The C1005B-Series is available lighted or unlighted, in a variety of colors, with solder lug or .250 tabs. Current ratings range from 7-16 amps at 125 and 250 VAC and up to 32 VDC.









Resources:

Configure a Complete Part

Download CAD & Sales Drawing >

Product Highlights

- .550 x 1.125 mounting hole (14mm x 28.6mm)
- Ratings from 7-16A
- Standard Reset/Off Legend
- .250 Tabs or Solder Lug Terminations
- 65°C Max Operating Temperature
- 1000 AIC Interrupting Capacity
- 1500 VAC Dielectric Strength
- 100M ohms @500VDC Insulation Resistance
- UL1077, UL1363, IEC 60934

Typical Applications:

- Household and Commercial Appliances
- On/Off-Highway
- Marine
- Telecom
- Power Strips and Supplies
- Audio-Visual Equipment
- Medical
- Generators

Carling Technologies®
Innovative Designs. Powerful Solutions.

Carling Technologies, Inc.
60 Johnson Avenue, Plainville, CT 06062
Email: sales@carlingtech.com
Application Support: team2@carlingtech.com
Phone: 860.793.9281 **Fax:** 860.793.9231

www.carlingtech.com

C1005B	-	3	B	15	1	B	R	3
1 Series		*2 Illumination*	*3 Termination*	*4 Current Rating*	*5 Contact Material*	*6 Bezel Legend*	*7 Rocker Color*	*8 Lamp Voltage*

1 SERIES
C1005B

2 ILLUMINATION
2 Non-Lighted
3 Lighted

3 TERMINATION
A Solder Lug
B .250 Tab

4 CURRENT RATING (AMPERES)

07	7 amps	**12**	12 amps
08	8 amps	**13**	13 amps
09	9 amps	**14**	14 amps
10	10 amps	**15**	15 amps
11	11 amps	**16**	16 amps

5 CONTACT MATERIAL [1]
1 Silver Cad Oxide (switch), Silver plated copper (breaker)

6 BEZEL LEGEND IMPRINT
B Black Bezel with white legend
W White Bezel with black legend
C Gray Bezel with black legend

7 ROCKER COLOR
R Red
G Green
U Blue
T Clear
Note: RESET OFF Legend is standard.

8 LAMP VOLTAGE
3 Neon Lamp 125/250 VAC
9 Non-lighted

Notes:
1. Silver cad oxide switch and breaker contacts are available as a special order. Specify 3 for selection 5

Dimensional Specifications: in. [mm]

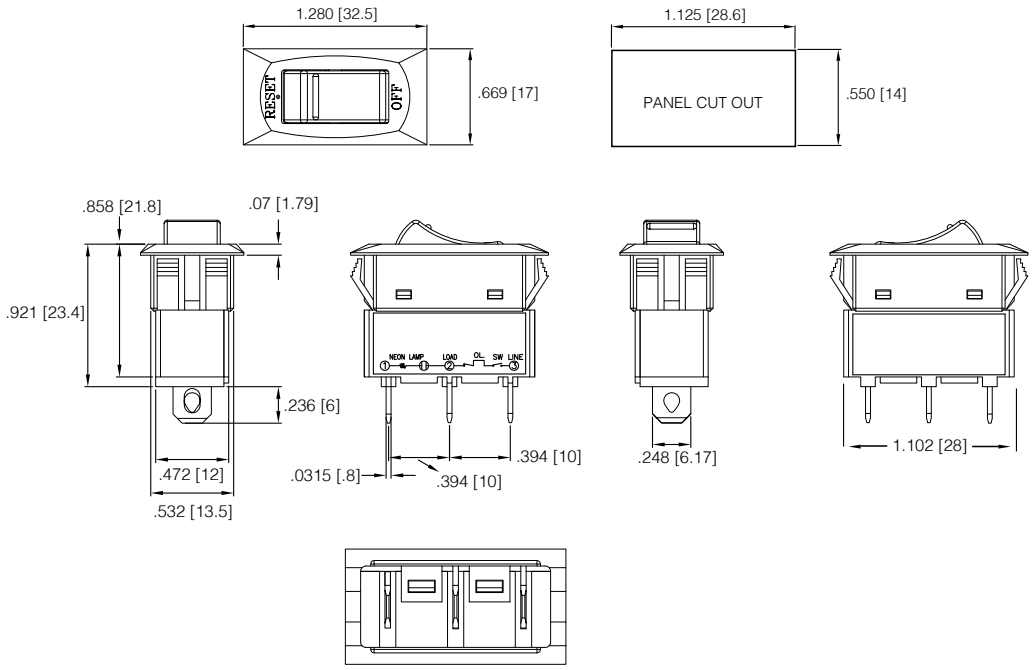

Time Delay

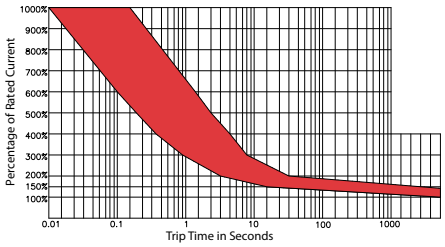

Overload	Trip Time
100%	No Trip
150%	Trip in 1 hr
200%	4.0 ~ 40 sec.
300%	0.9 ~ 8.0 sec.
400%	0.42 ~ 5.0 sec.
500%	0.25 ~ 3.0 sec.
600%	0.01 ~ 1.8 sec.

Time Trip Factor [1]	
-10 °C	x 1.70
-5 °C	x 1.60
0 °C	x 1.50
5 °C	x 1.40
10 °C	x 1.30
15 °C	x 1.20
20 °C	x 1.10
25 °C	x 1.00

Time Trip Factor [1]	
30 °C	x 0.90
35 °C	x 0.85
40 °C	x 0.80
45 °C	x 0.75
50 °C	x 0.70
55 °C	x 0.65
60 °C	x 0.60

Notes:
1. Trip Time factor is a guideline that indicates ambient temperature effect on trip times at various overload values.

*Manufacturer reserves the right to change product specification without prior notice.

Authorized Sales Representatives and Distributors

Click on a region of the map below to find your local representatives and distributors or visit ***www.carlingtech.com/findarep***.



About Carling

Founded in 1920, Carling Technologies is a leading manufacturer of electrical and electronic switches and assemblies, circuit breakers, electronic controls, power distribution units, and multiplexed power distribution systems. With four ISO registered manufacturing facilities and technical sales offices worldwide, Carling Technologies Sales, Service and Engineering teams do much more than manufacture electrical components, they engineer powerful solutions! To learn more about Carling please visit **www.carlingtech.com/company-profile.**

To view all of Carling's environmental, quality, health & safety certifications please visit **www.carlingtech.com/environmental-certifications**

Worldwide Headquarters

Carling Technologies, Inc.
60 Johnson Avenue, Plainville, CT 06062
Phone: 860.793.9281 **Fax:** 860.793.9231
Email: sales@carlingtech.com

Northern Region Sales Office: nrsm@carlingtech.com
Southeast Region Sales Office: sersm@carlingtech.com
Midwest Region Sales Office: mrsm@carlingtech.com
West Region Sales Office: wrsm@carlingtech.com
Latin America Sales Office: larsm@carlingtech.com

Asia-Pacific Headquarters

Carling Technologies, Asia-Pacific Ltd.,
Suite 1607, 16/F Tower 2, The Gateway,
Harbour City, 25 Canton Road,
Tsimshatsui, Kowloon, Hong Kong
Phone: Int + 852-2737-2277 **Fax:** Int + 852-2736-9332
Email: sales@carlingtech.com.hk

Shenzhen, China: shenzhen@carlingtech.com
Shanghai, China: shanghai@carlingtech.com
Pune, India: india@carlingtech.com
Kaohsiung, Taiwan: taiwan@carlingtech.com
Yokohama, Japan: japan@carlingtech.com

Europe | Middle East | Africa Headquarters

Carling Technologies LTD
4 Airport Business Park, Exeter Airport,
Clyst Honiton, Exeter, Devon, EX5 2UL, UK
Phone: Int + 44 1392.364422 **Fax:** Int + 44 1392.364477
Email: ltd.sales@carlingtech.com

Germany: gmbh@carlingtech.com
France: sas@carlingtech.com

Carling Technologies®
Innovative Designs. Powerful Solutions.