ROBUST VARIETY







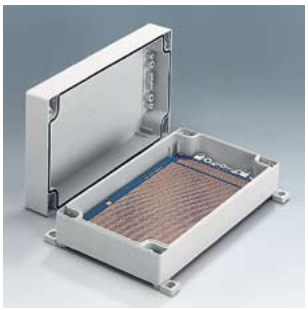

One-colored
Light gray, RAL 7035

Accessory
cover strips in
Silver gray, RAL 7001
Red, RAL 3020
Yellow, RAL 1023
Green, RAL 6024
Blue, RAL 5017





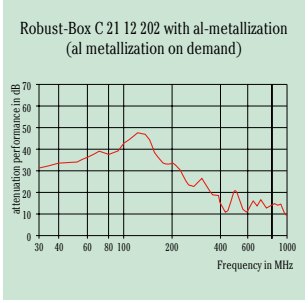

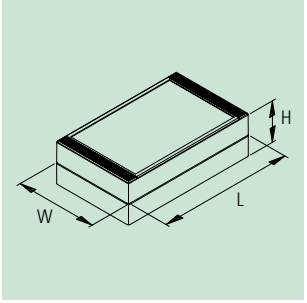

THE PRODUCT

Conceived as a dual case system, the ROBUST-BOX range offers a variety of installation options.

Both case shells are equipped with premolded threads. You as the user can now decide whether the flat or the high part of the case is to be used as the bottom part.

YOUR ADVANTAGE

Two standard materials (UL 94 HB):
ABS – approved as a terminal mounting case or in Polycarbonate – a solid and robust case, with high heat resistance for use in adverse environments.

Easy-assembly construction. The case shells can be used as either top or base section.

The cover fixings are outside of the sealed area. The fixing screws are rust proof and captured in the cover.

There is an area recessed by min. 0.031" for the mounting of membrane keyboards.

Colorful cover strips for coding (as an alternative to the standard version in light gray).

Applicable as desktop case and wall mounting case.

APPLICATIONS

This case system is especially suitable for a wide range of **electric installations**, e.g. heating, climate, ventilation, machine building and construction units.

But it can also be used in the **electronics sector**, e.g. as push-button case, for controllers, sensors in the interior etc.

PROTECTION CLASS IP 66

With sealing (supplied with the case).

Subject to technical modification without notice. Typographical and other errors do not justify any claim for damages.
Stand: 10/09 usa Copyright © 2009 OKW Gehäusesysteme

ROBUST-BOX WIDTH 3.150"

Outside dim. in inches

Length	Width	Height
3.150	3.150	2.362/3.150
4.724	3.150	2.362/3.150
6.299	3.150	2.362/3.150
9.449	3.150	2.362/3.150

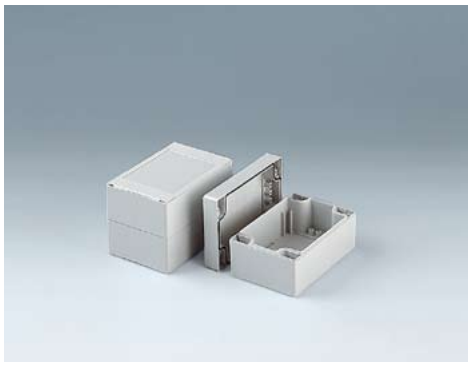



ROBUST-BOX WIDTH 4.724"

Outside dim. in inches

Length	Width	Height
4.724	4.724	2.362/3.543
7.874	4.724	2.362/3.543
9.449	4.724	2.362/3.543

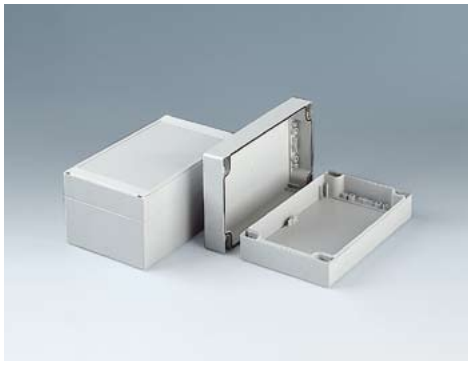



ROBUST-BOX WIDTH 6.299"

Outside dim. in inches

Length	Width	Height
6.299	6.299	2.362/3.543
9.449	6.299	2.362/3.543
9.449	6.299	4.724





ROBUST-BOX WIDTH 7.874"

Outside dim. in inches

Length	Width	Height
11.811	7.874	3.150/4.724/6.299

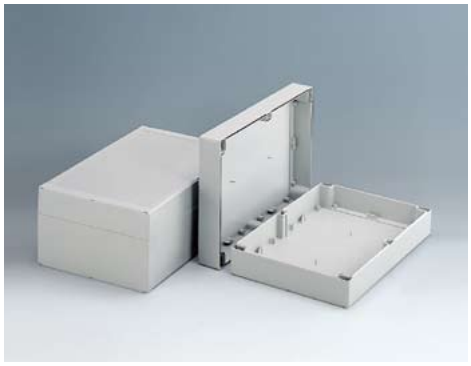



ROBUST-BOX WIDTH 9.449"

Outside dim. in inches

Length	Width	Height
14.173	9.449	3.150/4.724/6.299





ROBUST-BOX

COMPLETE ENCLOSURES*1

Part-No. version I (ABS)	Part-No. version II (PC)	ROBUST-BOX	Outside dim. in inches L	W	H	Equipment (dim. in inches) max. size of PCB*2 shell "T"	max. size of PCB*2 shell "G"	dim. keypad
C 20 08 081	C 20 08 082	width 3.150"	3.150	3.150	2.362	1.575 x 2.559	1.575 x 2.559	1.681 x 2.583
C 21 08 081	C 21 08 082		3.150	3.150	3.150	1.575 x 2.559	1.575 x 2.559	1.681 x 2.583
C 20 08 121	C 20 08 122		4.724	3.150	2.362	3.150 x 2.559	3.150 x 2.559	3.254 x 2.583
C 21 08 121	C 21 08 122		4.724	3.150	3.150	3.150 x 2.559	3.150 x 2.559	3.254 x 2.583
C 20 08 161	C 20 08 162		6.299	3.150	2.362	4.724 x 2.559	4.724 x 2.559	4.827 x 2.585
C 21 08 161	C 21 08 162		6.299	3.150	3.150	4.724 x 2.559	4.724 x 2.559	4.827 x 2.585
C 20 08 241	C 20 08 242		9.449	3.150	2.362	7.874 x 2.559	7.874 x 2.559	7.980 x 2.583
C 21 08 241	C 21 08 242		9.449	3.150	3.150	7.874 x 2.559	7.874 x 2.559	7.980 x 2.583
C 20 12 121	C 20 12 122	width 4.724"	4.724	4.724	2.362	3.150 x 4.134	3.150 x 4.134	3.256 x 4.154
C 21 12 121	C 21 12 122		4.724	4.724	3.543	3.150 x 4.134	3.150 x 4.134	3.256 x 4.154
C 20 12 201	C 20 12 202		7.874	4.724	2.362	6.299 x 4.134	6.299 x 4.134	6.402 x 4.154
C 21 12 201	C 21 12 202		7.874	4.724	3.543	6.299 x 4.134	6.299 x 4.134	6.402 x 4.154
C 20 12 241	C 20 12 242		9.449	4.724	2.362	7.874 x 4.134	7.874 x 4.134	7.978 x 4.150
C 21 12 241	C 21 12 242		9.449	4.724	3.543	7.874 x 4.134	7.874 x 4.134	7.978 x 4.150
C 20 16 161	C 20 16 162	width 6.299"	6.299	6.299	2.362	4.724 x 5.709	4.724 x 5.709	4.827 x 5.728
C 21 16 161	C 21 16 162		6.299	6.299	3.543	4.724 x 5.709	4.724 x 5.709	4.827 x 5.728
C 20 16 241	C 20 16 242		9.449	6.299	2.362	7.874 x 5.709	7.874 x 5.709	7.972 x 5.728
C 21 16 241	C 21 16 242		9.449	6.299	3.543	7.874 x 5.709	7.874 x 5.709	7.972 x 5.734
C 24 16 241	C 24 16 242		9.449	6.299	4.724	7.874 x 5.591	7.992 x 5.866	7.972 x 5.728
C 21 20 301	–	width 7.874"	11.811	7.874	3.150	10.472 x 6.575	10.394 x 6.614	10.339 x 6.762
C 24 20 301	–		11.811	7.874	4.724	10.472 x 6.496	10.394 x 6.614	10.339 x 6.762
C 25 20 301	–		11.811	7.874	6.299	10.472 x 6.496	10.394 x 6.575	10.339 x 6.762
C 21 24 361	–	width 9.449"	14.173	9.449	3.150	12.874 x 8.150	12.795 x 8.189	12.713 x 8.343
C 24 24 361	–		14.173	9.449	4.724	12.874 x 8.071	12.795 x 8.189	12.713 x 8.343
C 25 24 361	–		14.173	9.449	6.299	12.835 x 8.071	12.756 x 8.150	12.713 x 8.343

SEPARATE PARTS (SINGLE PIECES)

Shell width 3.150", ABS RAL 7035 T (H = 1.575")	G (H = 0.787")	G (H = 1.575")	Shell width 3.150", PC RAL 7035 T (H = 1.575")	G (H = 0.787")	G (H = 1.575")	L x W in inches
C 10 80 801	C 00 80 801	C 20 80 801	C 10 80 802	C 00 80 802	C 20 80 802	3.150 x 3.150
C 10 81 201	C 00 81 201	C 20 81 201	C 10 81 202	C 00 81 202	C 20 81 202	4.724 x 3.150
C 10 81 601	C 00 81 601	C 20 81 601	C 10 81 602	C 00 81 602	C 20 81 602	6.299 x 3.150
C 10 82 401	C 00 82 401	C 20 82 401	C 10 82 402	C 00 82 402	C 20 82 402	9.449 x 3.150

Shell width 4.724", ABS RAL 7035 T (H = 1.181")	T (H = 2.362")	G (H = 1.181")	Shell width 4.724", PC RAL 7035 T (H = 1.181")	T (H = 2.362")	G (H = 1.181")	L x W in inches
C 01 21 201	C 21 21 201	C 11 21 201	C 01 21 202	C 21 21 202	C 11 21 202	4.724 x 4.724
C 01 22 001	C 21 22 001	C 11 22 001	C 01 22 002	C 21 22 002	C 11 22 002	7.874 x 4.724
C 01 22 401	C 21 22 401	C 11 22 401	C 01 22 402	C 21 22 402	C 11 22 402	9.449 x 4.724

Shell width 6.299", ABS RAL 7035 T (H = 1.181")	T (H = 2.362")	G (H = 1.181")	G (H = 2.362")	Shell width 6.299", PC RAL 7035 T (H = 1.181")	T (H = 2.362")	G (H = 1.181")	G (H = 2.362")	L x W in inches
C 01 61 601	C 21 61 601	C 11 61 601	–	C 01 61 602	C 21 61 602	C 11 61 602	–	6.299 x 6.299
C 01 62 401	C 21 62 401	C 11 62 401	C 31 62 401	C 01 62 402	C 21 62 402	C 11 62 402	C 31 62 402	9.449 x 6.299

Shell width 7.874", ABS RAL 7035 T (H = 1.575")	T (H = 3.150")	G (H = 1.575")	G (H = 3.150")	L x W in inches
C 12 03 001	C 42 03 001	C 22 03 001	C 52 03 001	11.811 x 7.874

Shell width 9.449", ABS RAL 7035 T (H = 1.575")	T (H = 3.150")	G (H = 1.575")	G (H = 3.150")	L x W in inches
C 12 43 601	C 42 43 601	C 22 43 601	C 52 43 601	14.173 x 9.449

For case shells width 3.150"	width 4.724"	width 6.299"	width 7.874"	width 9.449"	Accessories (only if separate parts are ordered) Article	
C 22 99 001	C 22 99 001	C 22 99 001	–	–	Assembly kit	each 4 screws for the case assembly and for mounting PCBs
–	–	–	C 22 99 002	C 22 99 002	Assembly kit	each 6 screws for the case assembly + 8 for PCBs, centre covers
C 22 00 801	C 22 01 201	C 22 01 601	C 22 02 001	C 22 02 401	Cover strips without holes	PC, light gray, RAL 7035, each 1 pc
C 22 10 801	C 22 11 201	C 22 11 601	C 22 12 001	C 22 12 401	Cover strips with holes*3	PC, light gray, RAL 7035, each 1 pc

ACCESSORIES (UNIVERSAL)

Article	For enclosure ROBUST-BOX	Version / Application	Part-No.
① Case feet	for all case sizes	simply snap-in*4 when using the case for desktop application, 4 pcs	C 22 99 018
② Wall mounting brackets	for all case sizes	for exterior wall mounting, 4 pcs incl. fixing screws	C 22 99 028
③ Securing hinge	width 3.150/4.724/6.299"	for securing the cover, e.g. during servicing, 2 pcs incl. fixing screws	C 22 99 031
④ Hinge	for all case sizes	additional machining (drilling) required, 2 complete hinges	C 22 99 088
⑤ PCB support	width 4.724"	for mounting pre-assembled PCB units, 2 pcs incl. fixing screws	C 22 99 058
	width 3.150/6.299/7.874/9.449"	for mounting pre-assembled PCB units, 4 pcs incl. fixing screws	C 22 99 068
⑥ Security kit	width 3.150"	for use with lead tags, each 4 plugs, 2 cover strips with holes for the top in light gray	C 22 99 048
	width 4.724"		C 22 99 042
	width 6.299"		C 22 99 046
	for all case sizes	plug as a single part, 1 plug	C 22 99 040

Article	Version / Application	for ROBUST-BOX width 3.150"	width 4.724"	width 6.299"
⑦ Fastening elements to DIN-Rails	according to DIN EN 60 715 TH35, 2 pcs + assembly kit	C 22 01 088	C 22 03 128	C 22 04 168
⑧ Cover strips (optionally supplied to the light gray colored standard versions, simply clip into top or base)	silver gray, RAL 7001, 2 pcs for the top, 2 pcs for the base*3	C 22 01 082	C 22 03 123	C 22 04 162
	red, RAL 3020, 2 pcs for the top, 2 pcs for the base*3	C 22 01 084	C 22 03 124	C 22 04 164
	yellow, RAL 1023, 2 pcs for the top, 2 pcs for the base*3	C 22 01 085	C 22 03 125	C 22 04 165
	green, RAL 6024, 2 pcs for the top, 2 pcs for the base*3	C 22 01 086	C 22 03 126	C 22 04 166
	blue, RAL 5017, 2 pcs for the top, 2 pcs for the base*3	C 22 01 087	C 22 03 127	C 22 04 167



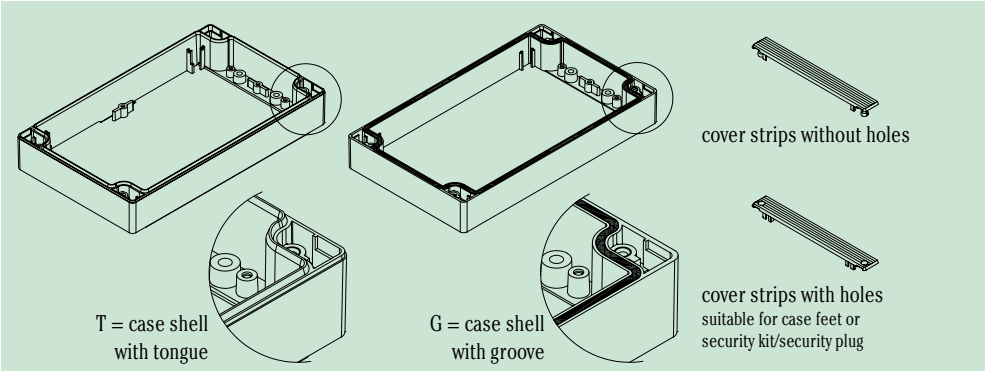

To achieve one ROBUST-BOX from separate parts, for a special combination, please order:

1 shell "T" (with tongue).
1 shell "G" (with groove).
1 assembly kit.
4 cover strips (table top applications) or 2 cover strips (wall mounting or DIN rail mounting).

*1 case assembly with 4 screws (width 3.150"/4.724"/6.299") and 6 screws (width 7.874"/9.449")
Supply: two case shells (one with tongue; one with groove and gasket), each two pairs of cover strips (2 for the top, 2 with holes for the base) in light gray and 1 assembly kit.

*2 L x W in inches. The dimensions were measured as clearance between the guide ridges (PCB assembly by means of PCB supports, accessories).
To assemble the PCBs on the fastening pillars side L (length) the PCBs must be approx. 1.181" longer (cutouts necessary on the 4 corners in accordance with the case screw fittings).

*3 cover strips with holes suitable for case feet or security kit/security plug (separate articles)

*4 because of levelling out the length's tolerance of the cover strips we recommend to glue the case feet of sizes 7.874" x 11.811" and 9.449" x 14.173"

Important: With additional machining please indicate the parts "with or without groove".

Information: ROBUST-BOX in PC with transparent top on demand.