SURFACE MOUNT SILICON ZENER DIODE



SOD-323 Plastic Package

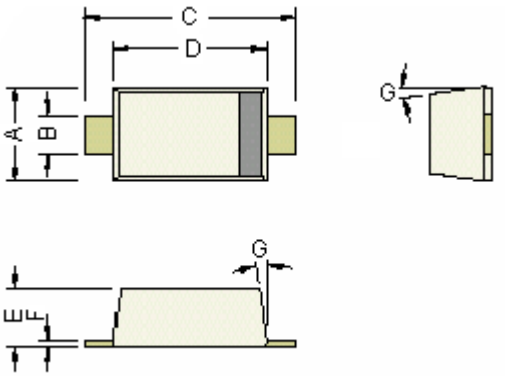

Dimensions: Millimetres

Dimensions	Minimum	Maximum
A	1.15	1.35
B	0.25	0.40
C	2.30	2.80
D	1.60	1.80
E	0.80	1.10
F	0.00	0.15
G	5°	

Dimensions: Millimetres

Absolute Maximum Ratings

Description	Symbol	Value	Unit
Maximum Forward Voltage Drop at I_F = 10mA	V_F	0.9	V
Power Dissipation at 25°C	*P_D	200	mW
Peak Forward Surge Current, 8.3ms Single Half Sine-Wave Superimposed on Rated Load	**I_{FSM}	2.0	A
Operating Junction and Storage Temperature Range	T_j	- 55 to +150	°C

Notes: 1. *Mounted on 5.0mm^2 (0.13mm thick) land areas.

2. **Measured on 8.3ms, single half sine-wave or equivalent square wave, duty cycle = 4 pulses per minute maximum.

Electrical Characteristics (T_A=25°C unless specified otherwise) V_F at 10mA <0.9V

Marking Code	Zener Voltage		Zener Impedance				Reverse Leakage	
	V_Z at I_{ZT}		Z_{ZT} at I_{ZT}		Z_{ZK} at I_{ZK}		I_R at V_R	
	(V)		(Ω)	(mA)	(Ω)	(mA)	(µA)	(V)
	Minimum	Maximum	Maximum		Maximum		Maximum	
W1	2.28	2.52	85	5.0	500	1.0	100	1.0
W2	2.57	2.84	83				75	
W3	2.85	3.15	95				50	
W4	3.14	3.47					25	
W5	3.42	3.78					15	
W6	3.71	4.10					10	
W7	4.09	4.52					5.0	
W8	4.47	4.94	78					2.0
W9	4.85	5.36	60		480		0.1	0.8
WA	5.32	5.88	40		400			1.0
WB	5.89	6.51	10		200			2.0
WC	6.46	7.14	8		150			3.0
WD	7.13	7.88	7		50			5.0
WE	7.79	8.61						6.0
WF	8.65	9.56	10					7.0
WG	9.50	10.50	15		70			7.5
WH	10.45	11.55	20					8.5
WI	11.40	12.60			90			9.0
WK	12.35	13.65	25		110			10
WL	14.25	15.75	30					11
WM	15.20	16.80	40		170			12
WN	17.10	18.90	50					14
WO	19.00	21.00			220			15
WP	20.90	23.10	55					17
WR	22.80	25.20	80					18
WS	25.65	28.35			250			20
WT	28.50	31.50						22.5
WU	31.35	34.65						25
WW	34.20	37.80	90					27
WX	37.05	40.95			300			29

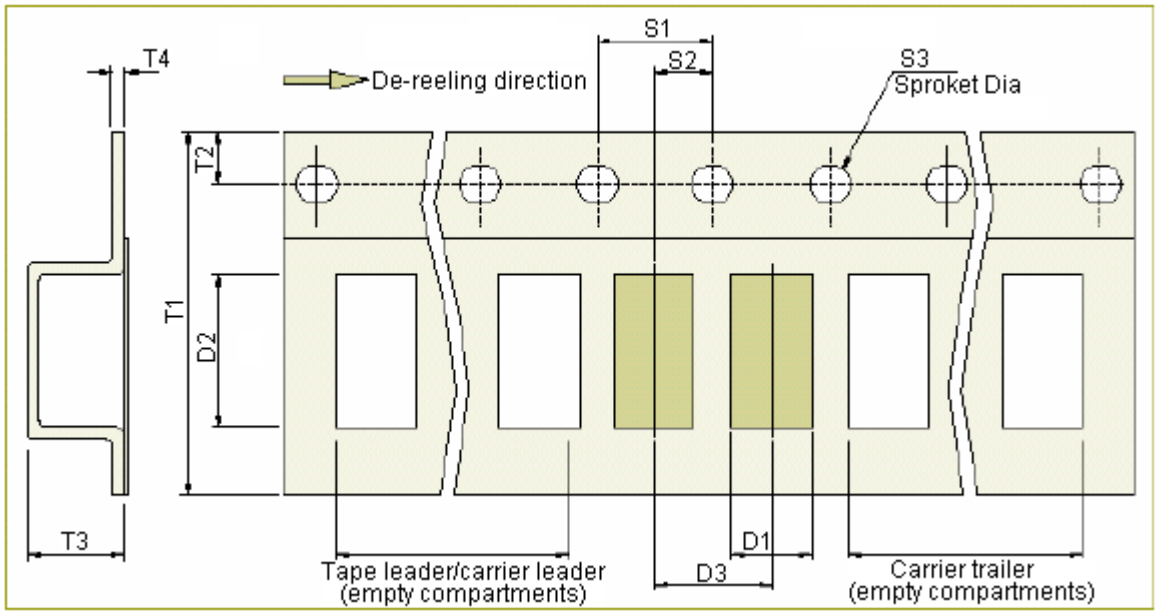

SMD Tape Specifications (8-12 mm)

Device	D1	D2	D3	T1	T2	T3 (Maximum)	T4 (Maximum)	S1	S2	S3
SOD-323	2.3 ±0.1	3.5 ±0.1	4.0 ±0.1	8.3 ±0.1	1.75 ±0.1	2.26	0.26	4.0 ±0.1	2.0 ±0.1	1.5 ±0.1

Dimensions: Millimetres

Packaging Specifications

Package/Case Type	Packaging Type	Standard Packing	Inner Carbon			Outer Carbon		
		Quantity	Quantity	Size (L x W x H) (cm)	Gross Weight (kg)	Qty	Size (L x W x H) (cm)	Gross Weight (kg)
SMD Glass/Plastic Packages								
SOD-323	T & R	3,000	15K	19 x 19 x 8	1.0	45K	23 x 23 x 23	2.9
	T & R	10,000	50K	33 x 33 x 1.3	2.6	300K	48 x 48 x 51	17.4

Notes: T & A: Tape and Ammo Pack; T & R: Tape and Reel; Bulk: Loose in Poly Bags; Tube: Tube and Carton; K: 1,000

Part Number Table

Description	Part Number
DIODE, ZENER 0.2W SOD-323	BZT52C2V4S
	BZT52C2V7S
	BZT52C3V0S
	BZT52C3V3S
	BZT52C3V6S
	BZT52C3V9S
	BZT52C4V3S
	BZT52C4V7S
	BZT52C5V1S
	BZT52C5V6S
	BZT52C6V2S
	BZT52C6V8S
	BZT52C7V5S
	BZT52C8V2S
	BZT52C9V1S
	BZT52C10S
	BZT52C11S
	BZT52C12S
DIODE, ZENER 0.2W SOD-323	BZT52C13S
	BZT52C15S
	BZT52C16S
	BZT52C218S
	BZT52C20S
	BZT52C22S
	BZT52C24S
	BZT52C27S
	BZT52C30S
	BZT52C33S
	BZT52C36S
	BZT52C39S

Disclaimer This data sheet and its contents (the "Information") belong to the Premier Farnell Group (the "Group") or are licensed to it. No licence is granted for the use of it other than for information purposes in connection with the products to which it relates. No licence of any intellectual property rights is granted. The Information is subject to change without notice and replaces all data sheets previously supplied. The Information supplied is believed to be accurate but the Group assumes no responsibility for its accuracy or completeness, any error in or omission from it or for any use made of it. Users of this data sheet should check for themselves the Information and the suitability of the products for their purpose and not make any assumptions based on information included or omitted. Liability for loss or damage resulting from any reliance on the Information or use of it (including liability resulting from negligence or where the Group was aware of the possibility of such loss or damage arising) is excluded. This will not operate to limit or restrict the Group's liability for death or personal injury resulting from its negligence. SPC Multicomp is the registered trademark of the Group. © Premier Farnell plc 2009.