FUJI ELECTRIC

# UL 489 Listed, BU series
# FUJI Molded Case Circuit Breakers

## ■ UL 489 Listed, C22.2 No.5

• UL File No. E90584 Vol.1c Sec. 2
• CSA certificate No. LR701975


AF97-276
BU3EHC


AF97-274
BU3FHC

| Frame | | 100A | | 150A | |
|---|---|---|---|---|---|
| Type | | **BU2EHC** | **BU3EHC** | **BU2FHC** | **BU3FHC** |
| Pole | | 2 | 3 | 2 | 3 |
| Rated insulation voltage (V) | AC | 480 | 600 | 480 | 600 |
| (UL 489) | DC | 250 | 250 | 250 | 250 |
| Rated current (A) | | 15, 20, 25, 30, 35, 40, 45, 50, 60, 70, 80, 90, 100 | | 15, 20, 25, 30, 35, 40, 50<br>60, 70, 80, 90, 100 | 15, 20, 25, 30, 35, 40, 50<br>60, 70, 80, 90, 100, 125, 150 |
| Rated interrupting | 600V AC | 14 | | 18 | |
| capacity (kA) | 480V AC | 14 | | 25 | |
| UL489 | 240V AC | 18 | | 65 (125A–150A:42kA) | |
| CSA22.2 | 250V DC | 10 | | 20 | |
| Dimensions | a | 70 | 105 | 105 | |
| (mm) | b | 160 | 160 | 160 | |
| | c | 86 | 86 | 86 | |
| | d | 104 | 104 | 104 | |
| Tripping device | | Thermal-magnetic | | Thermal-magnetic | |
| Tripping button | | Provided | | Provided | |
| Auxiliary switch | W | ● | ● | ● | |
| Alarm switch | K | ● | ● | ● | |
| Shunt trip | F | – | ● | ● | |
| Undervoltage trip | R | ● | ● | ● | |
| Operating handle *1 | V | BU0VFH | | BU0VFH | |
| | N | BU0NFH | | BU0NFH | |
| Terminal cover *2 | | BZ-CFHB-2 | BZ-CFHB-3 | BZ-CFHB-3 | BZ-CFHB-3 |

Notes: ● Factory-mounted optional accessories, specify the type number including optional accessories when ordering.
*1 Customer-mountable optional accessories
*2 For using N type handle: BZ-CFHB-2-**N**, BZ-CFHB-3-**N**
For using V type handle: BZ-CFHB-2-**V**, BZ-CFHB-3-**V**
• If required insulation barrier, contact FUJI.

## ■ Type number nomenclature

**BU 3 EH C - 050 L W K F2**

**Basic type**

**No. of poles**
3: 3-pole
2: 2-pole

**Frame size**
EH: 100AF
FH: 150AF

**Rated current**

| | | |
|---|---|---|
| 15: 15A | 40: 40A | 80: 80A |
| 20: 20A | 45: 45A | 90: 90A |
| 25: 25A | 50: 50A | 100: 100A |
| 30: 30A | 60: 60A | 125: 125A |
| 35: 35A | 70: 70A | 150: 150A |

**Terminal**

| | Line | Load | |
|---|---|---|---|
| L: | Lug terminals | Lug terminals | (Provided) |
| L1: | Flat terminals | Flat terminals | (Optional) |
| Y1: | Lug terminals | Flat terminals | (Optional) |

**With shunt trip device**
F2: 120–240V AC/125V DC
F6: 480–600V AC
FQ: 12V DC
FM: 24V DC
FN: 48V DC
FG: 250V DC

**With undervoltage trip device**

| | |
|---|---|
| R1: 120V AC | RG: 12V DC |
| R2: 240V AC | RM: 24V DC |
| R4: 480V AC | RN: 48V DC |
| R6: 600V AC | RJ: 125V DC |
| | RG: 250V DC |

**With alarm switch**
K: Alarm switch

**With auxiliary switch**
W: 1-auxiliary switch
W2: 2-auxiliary switch

## ■ Ordering information

Specify the following:
1. Type number of MCCB including factory-mounted optional accessories
2. Type number customer-mountable optional accessories

## ■ Dimensions, mm

**BU2EHC**

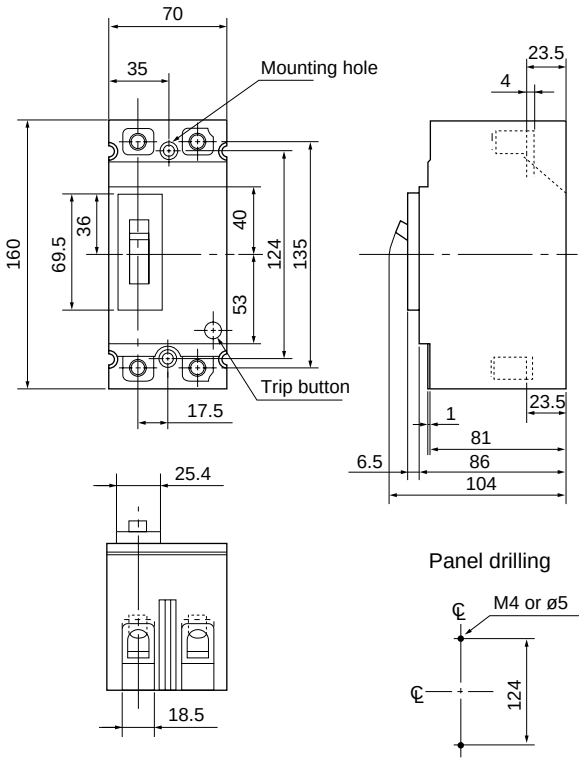


**BU2FHC**
**BU3EHC**
**BU3FHC**

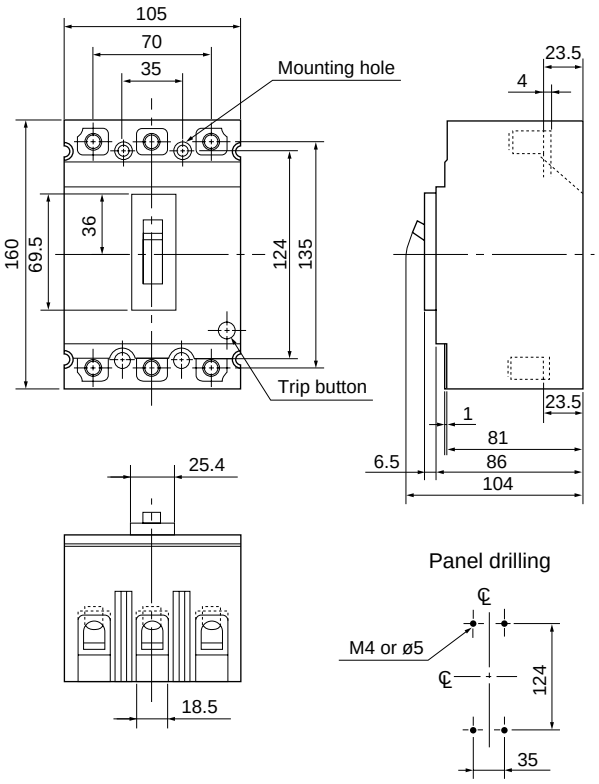

## ■ Characteristic curves

### 15 to 50A

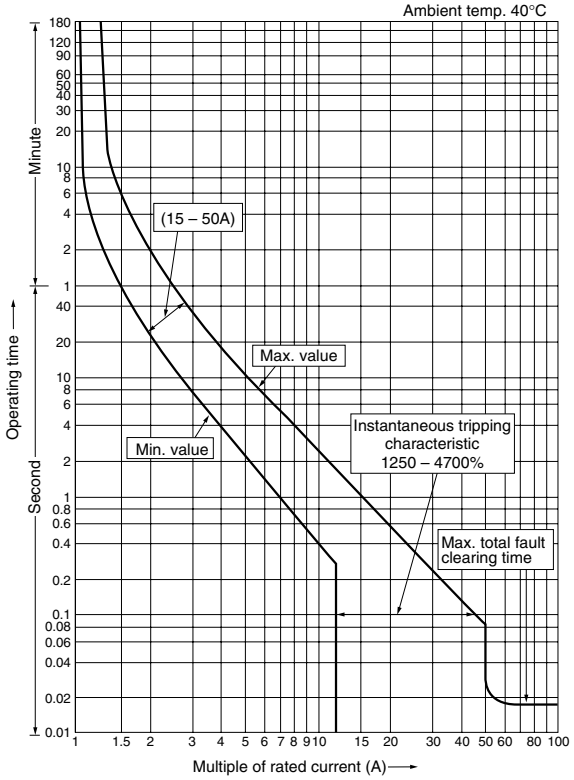


### 60 to 80A

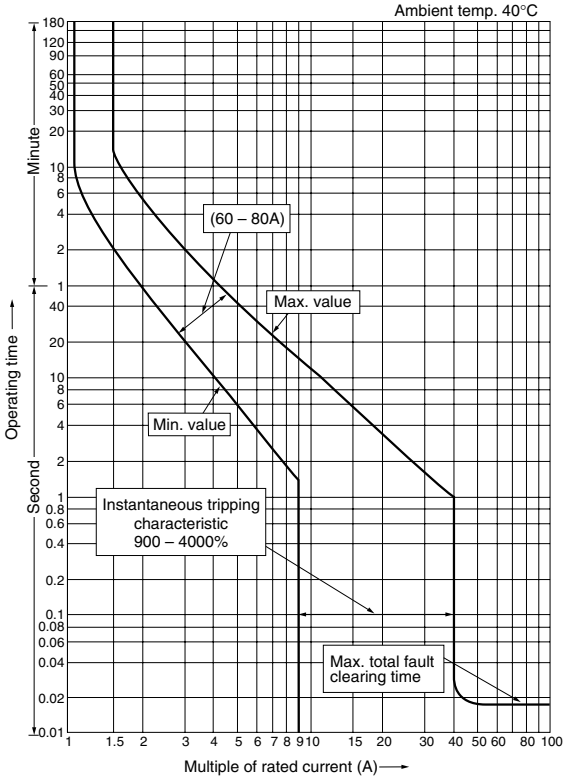


### 90 to 150A

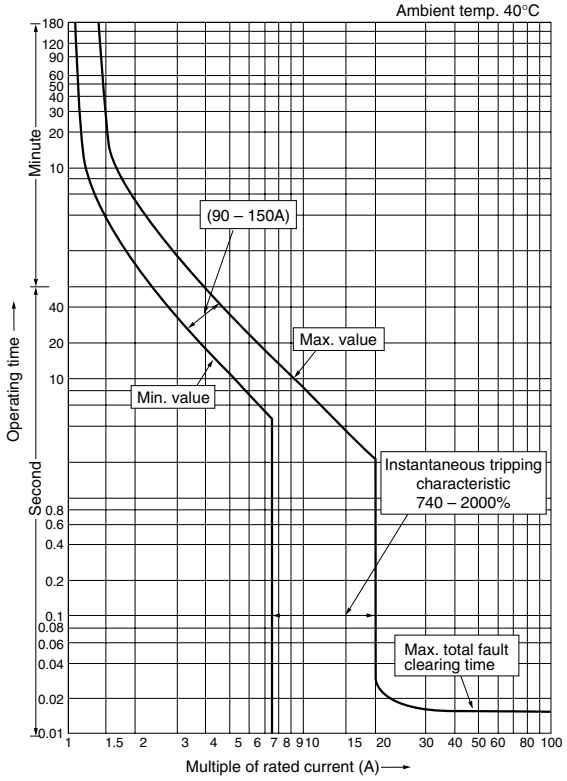


Temperature compensation curve

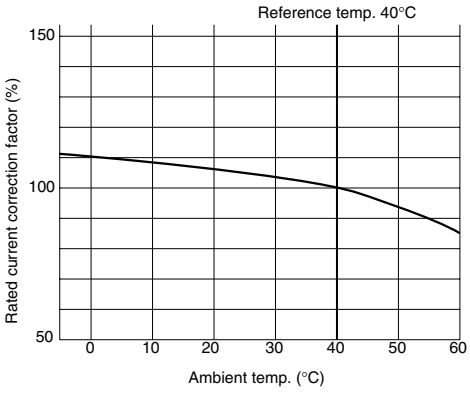

## ■ Optional accessories

### ● Shunt trip devices (F)

| Type | Rated voltage (V) | | Inrush current (A) | | Wiring |
|---|---|---|---|---|---|
| | AC | DC | AC | DC | |
| **F2** | 120 – 240 | 125 | 1.0 – 1.9 | 1.0 | |
| **F6** | 480 – 600 | – | 1.5 – 1.9 | – | |
| **FQ** | – | 12 | – | 7.5 | Black / Black |
| **FM** | – | 24 | – | 4.6 | |
| **FN** | – | 48 | – | 2.4 | |
| **FG** | – | 250 | – | 0.4 | |

### ● Undervoltage trip devices (R)

| Type | Rated voltage (V) | | Rated current (mA) | Wiring |
|---|---|---|---|---|
| | AC | DC | | |
| **R1** | 120 | – | 18 | |
| **R2** | 240 | – | 18 | |
| **R4** | 480 | – | 18 | |
| **R6** | 600 | – | 18 | |
| **RQ** | – | 12 | 200 | Blue / Blue |
| **RM** | – | 24 | 100 | |
| **RN** | – | 48 | 50 | |
| **RJ** | – | 125 | 18 | |
| **RG** | – | 250 | 18 | |

### ● Auxiliary switches (W)

| Type | | Color of lead wire | | Make/break current (A) | | |
|---|---|---|---|---|---|---|
| | | MCCB/ON | MCCB/OFF, Trip | Voltage | Resistive | Inductive |
| **W** | SPDT | Red / White / Brown/white | Red / White / Brown/White | 120V AC | 5 | 6 |
| | | | | 240V AC | – | 6 |
| | | | | 125V DC | – | 0.5 |
| | | | | 250V DC | – | 0.25 |
| **W2** | 2PDT | Red / White / Brown/White; Orange / Gray / Orange/White | Red / White / Brown/White; Orange / Gray / Orange/White | 120V AC | 5 | 6 |
| | | | | 240V AC | – | 6 |
| | | | | 125V DC | – | 0.5 |
| | | | | 250V DC | – | 0.25 |

### ● Alarm switches (K)

| Type | | Color of lead wire | | Make/break current (A) | | |
|---|---|---|---|---|---|---|
| | | MCCB/ON | MCCB/OFF, Trip | Voltage | Resistive | Inductive |
| **K** | SPDT | Purple / Yellow / Brown | Purple / Yellow / Brown | 240V AC | 5 | 5 |
| | | | | 28V DC | 5 | 2.5 |

### ● Available configurations

| Accessory \ Type | **BU2EHC, BU2FHC** | **BU3EHC, BU3FHC** | |
|---|---|---|---|
| | T | R | T |
| W Auxiliary switch | W | W | – |
| K Alarm switch | K | – | K |
| F Shunt trip | – | F | – |
| R Undervoltage trip | R | – | R |
| W2 | W2 | W2 | – |
| WK | – | W | K |
| W2K | – | W2 | K |
| WF | – | F | W |
| W2F | – | F | W2 |
| WR | – | W | R |
| W2R | – | W2 | R |
| KF | – | F | K |
| KR | – | – | – |
| WKF | – | – | – |
| WKR | – | – | – |

Note: Lead wiring

## ■ Dimensions, mm

### V type operating handle/BU0VFH

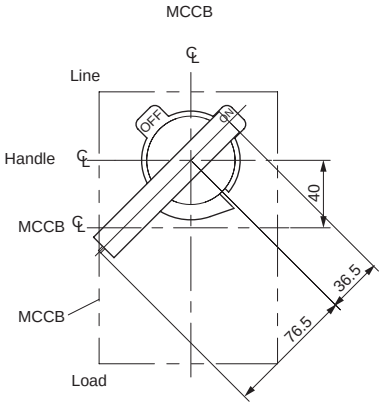


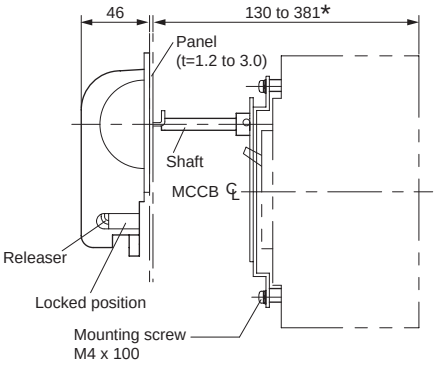


Panel cutting

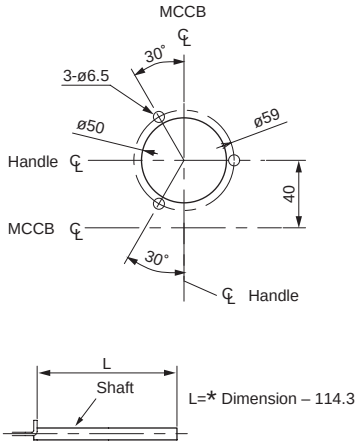





- The door cannot be locked or unlocked using the latch on the door handle.
- Handle protection structure IP54 (IEC 60529, NEMA12)

Distance between the handle and breaker can be shortened by cutting the shaft.

### N type operating handle/BU0NFH

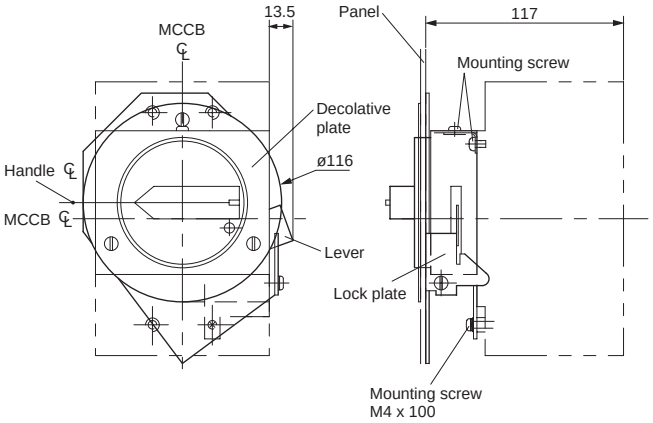


Panel drilling

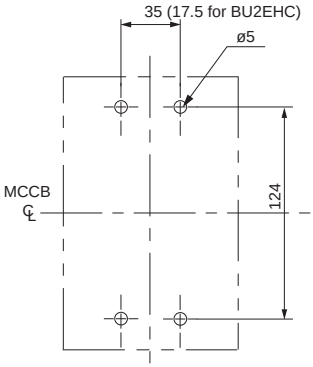


Panel cutting

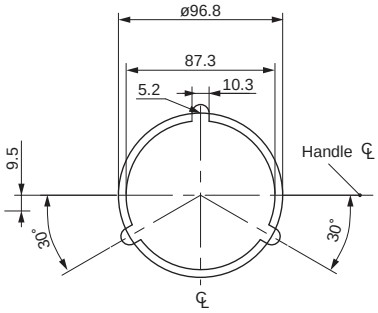


- The door cannot be locked or unlocked using the latch on the door handle. The door can be opened or closed only when the unit is set to OFF.
- Dust-proof packing is not provided

## ■ Wire connection

1. Make sure that no voltage is applied to the breaker.
2. Connect the breaker in the direction shown in Figure 1 so that the ON mark is on the line side and the OFF mark is on the load side.

**Fig. 1**

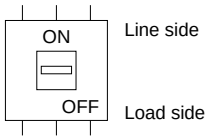


3. The connections of wires must conform to the U.S. National Electric Code (NEC) or the Canadian Electrical Code Part 1 (CEC).
4. For connection, use 60˚C copper wire (15A to 125A) or 75˚C copper wire only. The use of UL-certified or CSA-certified wire is recommended.
5. As the occurrence of a short circuit current could result in the generation of a large electromagnetic force between wires, be sure to firmly support the wires.
6. Periodically retighten the terminal screws. Do not block the arc gas exhaust.

**Lug terminals**

1. Table 1 lists the sizes of connectable wires. Use wires within this range.
2. The twist count for the wire must conform to Table 1. Multicore wires cannot be used.
3. Two different types of wires cannot be connected to the lug terminal together.
4. Do not solder the wire.
5. Use the tightening torque listed in Table 1 when securing the wire.

**Flat terminals**

1. Order insulating barriers (interphase barriers).
2. Insulate the terminal part.

**Table 1 Max. wire sizes and tightening torque**

| Rated current | Applicable lug terminal | Wire size | Tightening torque | Screw size |
|---|---|---|---|---|
| 15A max. | **BU0L12HF** | 14AWG (2.1mm²) | 512N•cm | Slotted head screw |
| 20A | | 12AWG | 45Lb-in | |
| 25A, 30A | | 10AWG | | |
| 35A–50A | | 8AWG | | |
| 60A | | 6AWG | 623N•cm | |
| 70A, 80A | **BU0L12AHF** | 4AWG | 55Lb-in | |
| 90A | | 3AWG | | |
| 100A | **BU0L15HF** | 3AWG | | |
| 110A | | 2AWG | | |
| 125A | | 1AWG | | |
| 150A | | 1/0AWG (53.5mm²) | | |

## ■ Mounting

Avoid mounting this breaker in an environment exposed to vibration, shock, dust, or excessive humidity. Secure the insulation distance between a board and the line side of the breaker as shown in Figure 2 and Table 2.

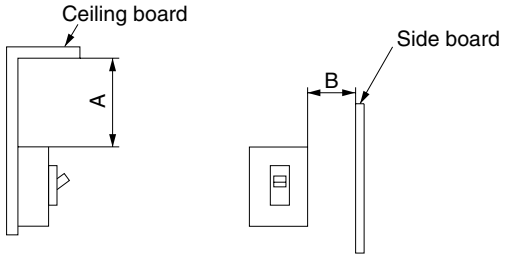


**Fig. 2 Insulation distance (line side)**

**Table 2 Insulation distance (line side)** [Unit: mm]

| Breaker type | Dimension A<br>Breaker to ceiling board | Dimension B<br>Breaker to side board |
|---|---|---|
| **BU□EHC** | 100 | 25 |
| **BU□FHC** | 100 | 25 |

## ⚠ Safety Considerations

- For safe operation, before using the product read the instruction manual or that comes with the product carefully or consult the Fuji sales representative from which you purchased the product.
- Some of the products listed in this catalog may have limits on their use or location or may require periodic inspections. Contact Fuji's sales representative for further information.
- For safe operation, wiring should be conducted only by qualified engineers who have sufficient technical knowledge about electrical work or wiring.


**Fuji Electric Co., Ltd.**

ED & C • Drive Systems Company

Gate City Ohsaki, East Tower
11-2, Osaki 1-chome, Shinagawa-ku, Tokyo, 141-0032, Japan

Phone: +81-3-5435-7132
Fax: +81-3-5435-7473 URL http://www.fujielectric.co.jp/eng/index.html



Printed on 100% recycled paper

Information in this catalog is subject to change without notice.



Printed in Japan 2003-3 1 FIS