Part Number: **BU-X15400-***
Description: **Epoxy Coated Battery Clip**
3107

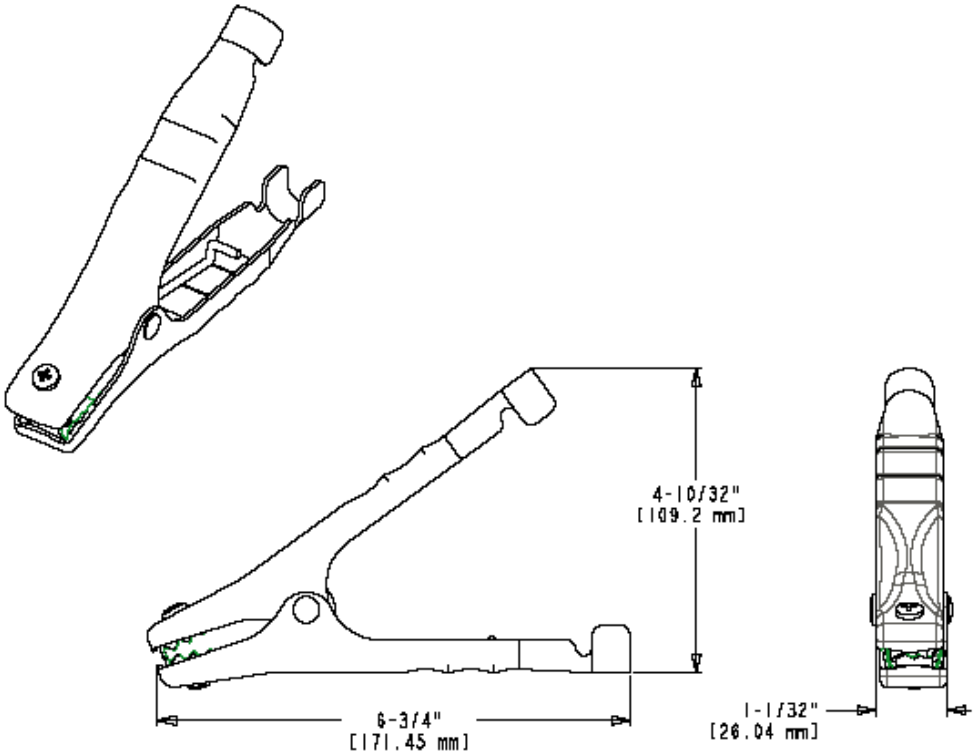

- Epoxy Coated Battery Clip
- Jaw opens 1.50” (38.1 mm) max Locks on to both side and top mounted battery terminals
- Material: steel, epoxy coated clip with copper plated jaws
- Length: 6.75” (171.45 mm)
- *Std.Colors: -0 Black, -2 Red
- Rating: 200 Amps
- RoHS Compliant

Mueller Electric Company
1625 E. 31st Street
Cleveland, Ohio 44114

ISO 9001:2000
Over 95 Years Of Innovation
www.muellerelectric.com

TEL. 800-955-2629
TEL. 216-771-5225
FAX. 216-771-3068