Part Number:	**BU-60H-***
Description:	**Alligator Clip with Acetate Handle**
3707	

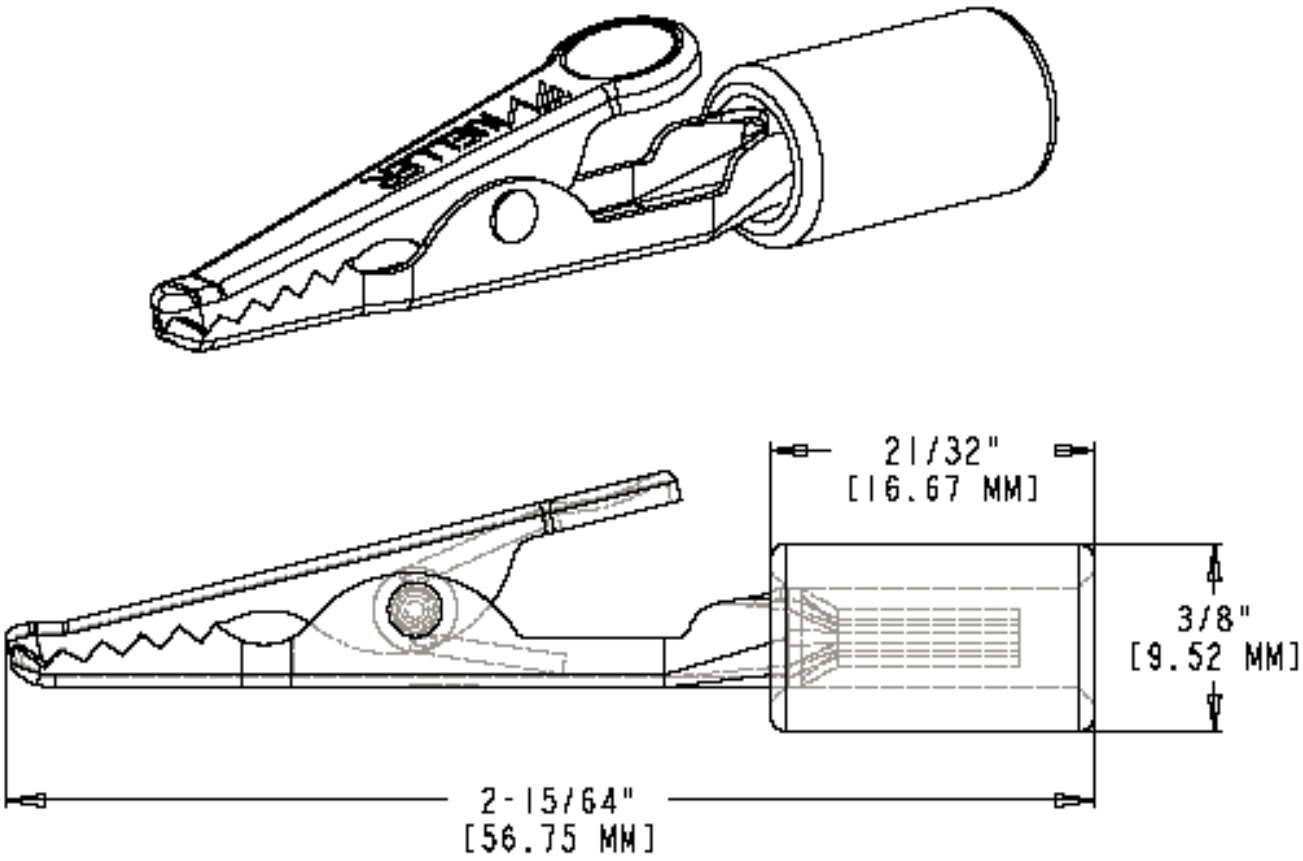

- Phone Tip Alligator Clip with Acetate Handle
- Same as BU-60 and includes an acetate insulated handle
- Jaw opens 0.31” (7.9 mm) max
- Length: 2.23” (56.75 mm)
- *Std.Colors: -0 Black, -2 Red, -4 Yellow, -5 Green, -6 Blue, -9 White
- Rating: 10 Amps
- RoHS Compliant

Mueller Electric Company
1625 E. 31st Street
Cleveland, Ohio 44114

ISO 9001:2000
Over 95 Years Of Innovation
www.muellerelectric.com

TEL. 800-955-2629
TEL. 216-771-5225
FAX. 216-771-3068