Part Number: BU-102B-*
Description: Insulated Battery Clip
2907

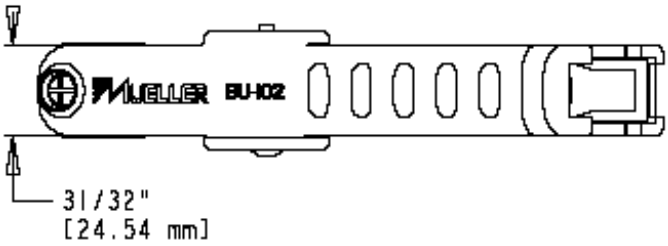

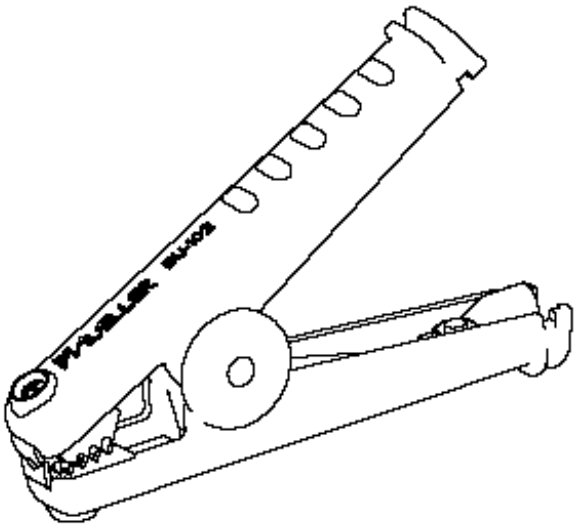

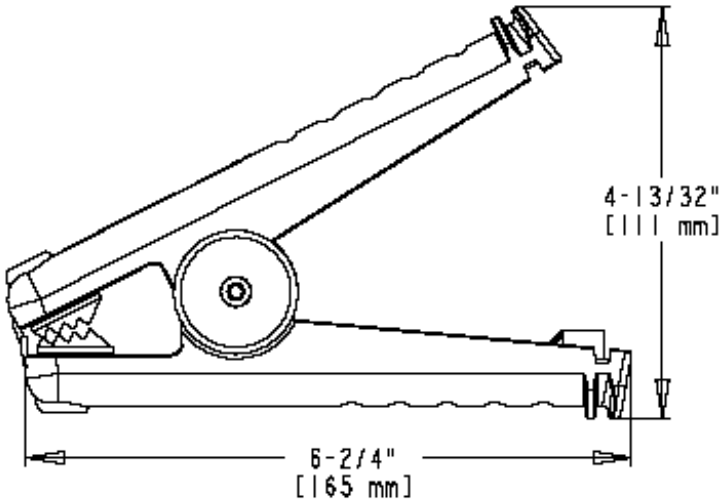

- Insulated Battery Clip
- Fully insulated clip with serrated jaws
- Material: Housing: glass-filled nylon; Jaw: copper;
  Spring: Music wire, zinc plated
- Length: 6.5”(165mm)
- *Std. Colors: -0 Black -2 Red
- Rating: 300 Amps

Mueller Electric Company
1625 E. 31st Street
Cleveland, Ohio 44114
ISO 9001:2000
Over 95 Years Of Innovation
www.muellerelectric.com
TEL. 800-955-2629
TEL. 216-771-5225
FAX. 216-771-3068