Part Number:	**BU-00207-***
Description:	**Safety Plunger Clip Adapter**
2607	

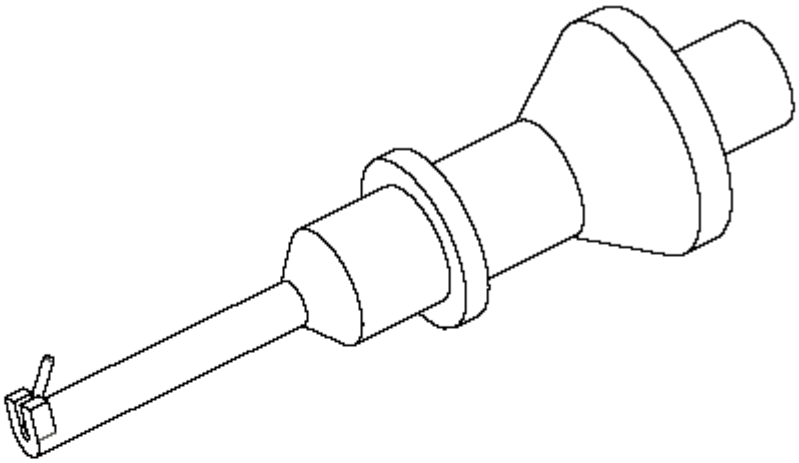

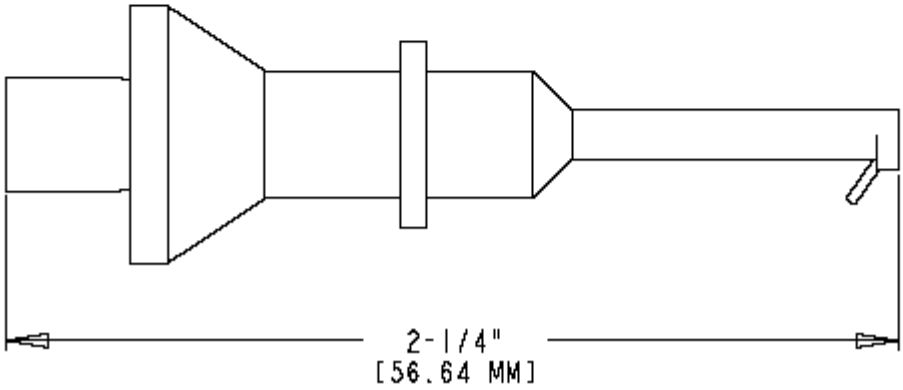

- **Safety Plunger Clip Adapter**
- **Length: 2.23” (56.64 mm)**
- **Material: Cap & Body: Nylon; Spring: Stainless steel**
  Contact: Beryllium copper
- **Rating: 1000 Volts, 15 Amps**

Mueller Electric Company
1625 E. 31st Street
Cleveland, Ohio 44114

ISO 9001:2000
Over 95 Years Of Innovation
www.muellerelectric.com

TEL. 800-955-2629
TEL. 216-771-5225
FAX. 216-771-3068