BOX ENCLOSURES, INC
28915 N. Herky Drive Unit, 107,
LAKE BLUFF, IL 60044
TEL: 847-932-4700 WWW.BOXENCLOSURES.COM FAX: 847-932-4701

ENCLOSURES & ASSEMBLY SERVICES

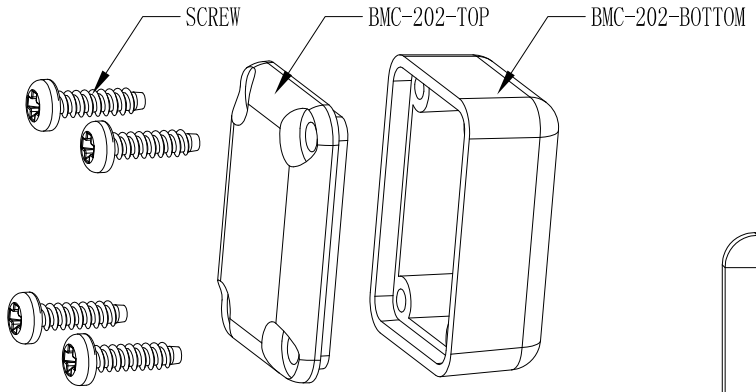

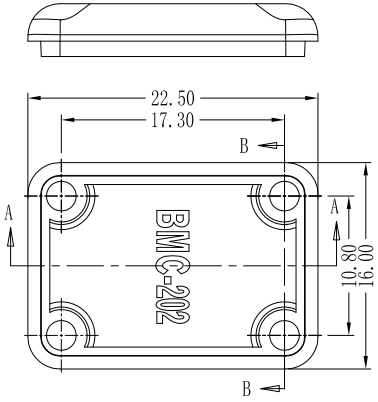

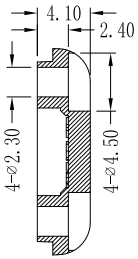

SECTION B-B

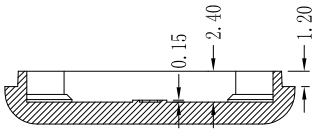

SECTION A-A

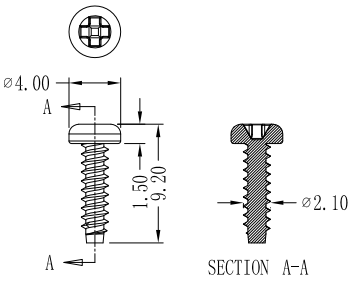

SECTION A-A

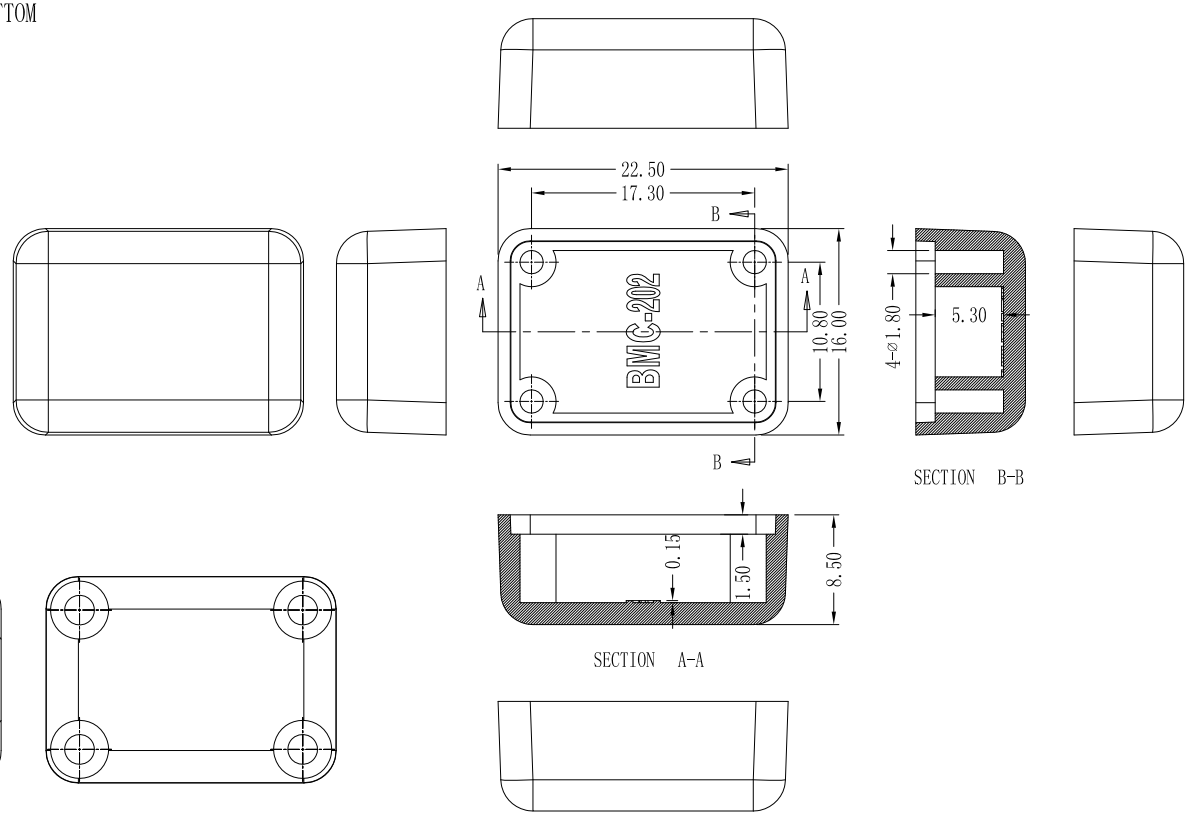

SECTION B-B

SECTION A-A

THIS DRAWING IS THE PROPERTY OF AND MAY EMBODY PROPRIETARY INFORMATION OWNED BY Box Enclosures . IT IS PROVIDED UNDER A CONFIDENTIAL RELATIONSHIP FOR A SPECIFIC PURPOSE. THE RECIPIENT AGREES TO USE IT ONLY FOR SUCH PURPOSE AND RETURN IT TO Box Enclosure UPON REQUEST.

ENCLOSURES & ASSEMBLY SERVICES

Title: BMC-202 Master Drawing		Dwg. No.:	Revision: / Model: / Part No.:
Material: ABS	TOLERANCE all dimension in mm unless otherwise specified. x ±0.20, .x ±0.10, .xx ±0.05, ANGLE ±0.5°	Color:	Drn. Date 14/1/2010 HUA
Finish:		Qty:	Chk. Date
Proj.		Sheet of	App. Date