Distributed by:

JAMECO® ELECTRONICS

www.Jameco.com ✦ 1-800-831-4242

The content and copyrights of the attached material are the property of its owner.

Jameco Part Number 1770576

Supplementary Fuseblocks
Type M, For 13/32″ × 1½″ Fuses
600 Volt, 30 Amps

BM Series

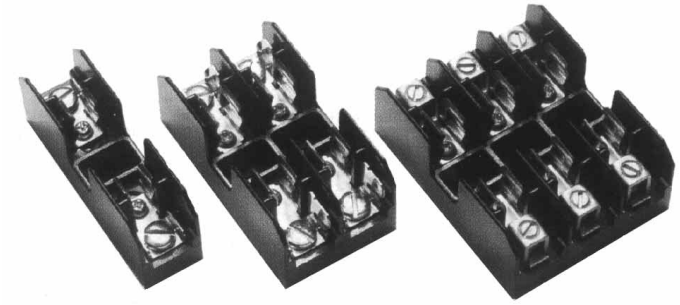

Catalog Symbol: BM Series

Type M Supplementary Fuseblocks

For use with any 13/32″ × 1½″ Fuses
(Bussmann KTK, FNQ, FNM, BAF, BAN and AGU)

Ampere Rating: 1/10 to 30A

Voltage Rating: 600V

Withstand Rating: 10,000A RMS Sym. or interrupting rating of the fuse used, whichever is lower.

Agency Information:
UL Recognized, UL 512, Guide IZLT2, File E14853
CSA Certified, C22.2 No. 39, Class 6225-01, File 47235

UL Flammability: 94VO

Material: Thermoplastic

DIN-RAIL Adapters: DRA-1 and DRA-2

Catalog Data

		Terminal Type			
Amps	Poles	Screw with Quick Connect*	Pressure Plate w/ Quick Connect*	Box Lug	Fig. No.
1/10	1	BM6031SQ	BM6031PQ	BM6031B	1
to	2	BM6032SQ	BM6032PQ	BM6032B	2
30	3	BM6033SQ	BM6033PQ	BM6033B	3

Wire Range CU Only


#10-#14


#10-#14


#6-#14

* QUICK CONNECT RATED FOR 20A MAXIMUM.

CE logo denotes compliance with European Union Low Voltage Directive (50-1000 Vac, 75-1500 Vdc). Refer to Data Sheet: 8002 or contact Bussmann Application Engineering at 636-527-1270 for more information.

Dimensional Data All dimensions (±0.015)

1 POLE

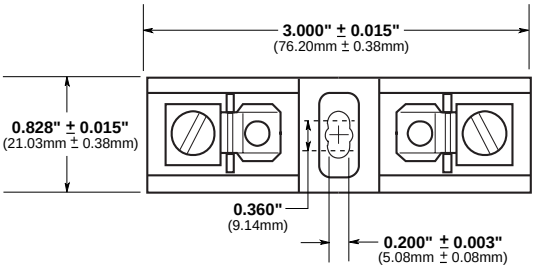

2 POLE

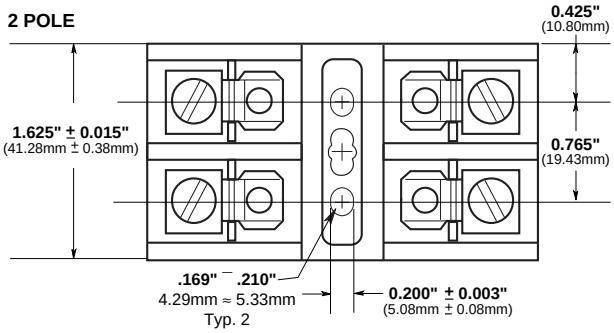

3 POLE

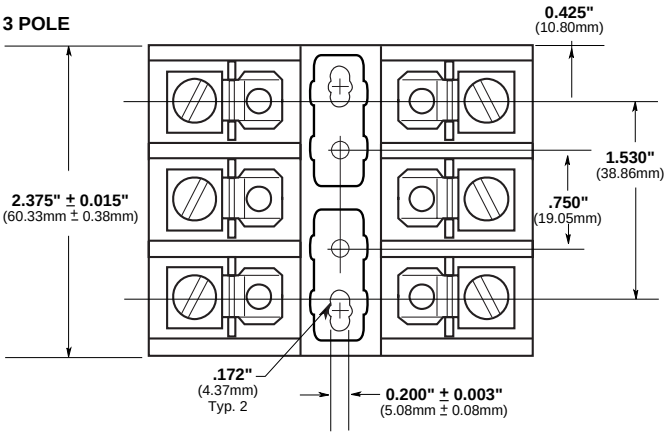

FUSEBLOCK LABEL (EXAMPLE SHOWN)

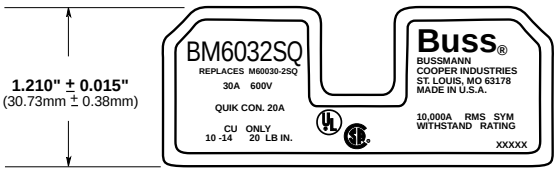

The only controlled copy of this Data Sheet is the electronic read-only version located on the Bussmann Network Drive. All other copies of this document are by definition uncontrolled. This bulletin is intended to clearly present comprehensive product data and provide technical information that will help the end user with design applications. Bussmann reserves the right, without notice, to change design or construction of any products and to discontinue or limit distribution of any products. Bussmann also reserves the right to change or update, without notice, any technical information contained in this bulletin. Once a product has been selected, it should be tested by the user in all possible applications.