# Subminiature, Radial Leaded, Fast-Acting Fuses
## PC-Tron Series

RoHS 2002/95/EC

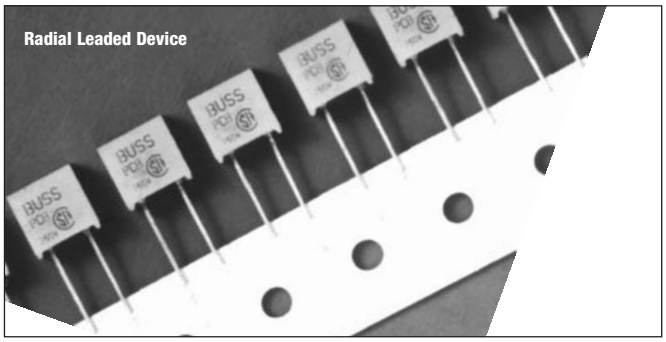


### Description
- Radial leaded, fast-acting thru-hole fuse
- Ideal for high voltage DC applications
- Board washable
- Optional mounting socket available (PCS)
- Available in different lead configurations

| AC Time-Current Characteristics | |
|---|---|
| % of Amp Rating | Opening Time |
| 100% | 4 hours minimum |
| 200% | 10 second maximum |

### Agency Information
- UL Recognized: E19180
- CSA: 42731

### Part Number System/Ordering - An Option Code Must Be Selected
- Specify packaging code prefix, product and option code suffix

BK PCB- 1/2 -R

Packaging Code Prefix
Fuse Series
Amp Rating
Option Code Suffix

### DC Application

The PC-Tron subminiature fuse is UL Recognized for DC supplementary overcurrent protection to provide individual protection for components or internal circuits in equipment. Suitability for a specific application is dependent on time constants and capacitance values. It is the responsibility of the customer to evaluate the information provided for applicability to their particular application.

### PCS Mounting Socket (RoHS compliant)
- Available as option. Specify catalog number BK/PCS (100 in a polybag) and short fuse lead length — PCC or PCE

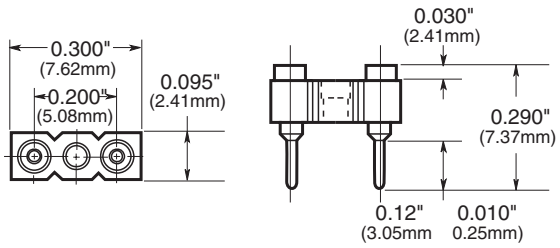


### Specifications

| Catalog Number | Lead Length | AC Voltage Rating | AC Interrupting | DC Voltage Rating | DC Interrupting Min. | DC Interrupting Max. |
|---|---|---|---|---|---|---|
| PCB-½, ¾, 1, 1-½, 2, 2-½ | Full - 0.750" (straight) | 250V | 50A@250V - 10kA@125V | 450V | 300 | 5900A |
| PCB-3 | Full - 0.750" (straight) | 250V | 50A@250V | 350V | 300 | 4400A |
| PCB-4 | Full - 0.750" (straight) | - | - | 400V | 300 | 2500A |
| PCC-½, ¾, 1, 1-½, 2, 2-½ | Short 0.100" (straight) | 250V | 50A@250V - 10kA@125V | 450V | 300 | 5900A |
| PCC-3 | Short 0.100" (straight) | 250V | 50A@250V - 10kA@125V | 350V | 300 | 4400A |
| PCD-5 | Full - 0.750" (straight) | 125V | 10kA@125V | 250V | 300 | 4200A |
| PCE-5 | Short 0.100" (straight) | 125V | 10kA@125V | 250V | 300 | 4200A |
| PCF-½, ¾, 1, 1-½, 2, 2-½ | 0.475" | 250V | 50A@250V - 10kA@125V | 450V | 300 | 5900A |
| PCF-3 | 0.475" | 250V | 50A@250V - 10kA@125V | 350V | 300 | 4400A |
| PCG-5 | 0.475" | 125V | 10kA@125V | 250V | 300 | 4200A |
| PCH-½, ¾, 1, 1-½, 2, 2-½ | 0.125" | 250V | 50A@250V - 10kA@125V | 450V | 300 | 5900A |
| PCH-3 | 0.125" | 250V | 50A@250V - 10kA@125V | 350V | 300 | 4400A |
| PCH-4 | 0.125" | - | - | 400V | 300 | 2500A |
| PCI-5 | 0.125" | 125V | 10kA@125V | 250V | 300 | 4200A |

Device designed to carry rated current for four hours minimum. An operating current of 80% or less of rated current is recommended, with further derating required at elevated ambient temperatures.

## Dimensions - mm (±0.005”/0.13mm)

### Standard Fuse (PCB, PCD)

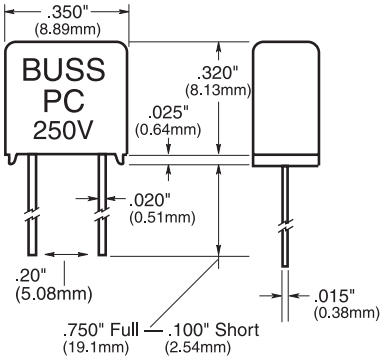


### Dimensional Data (PCH, PCI)

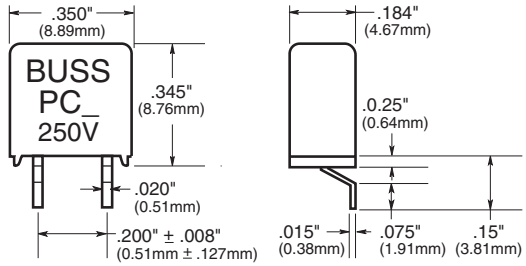


### Dimensional Data (PCF, PCG)

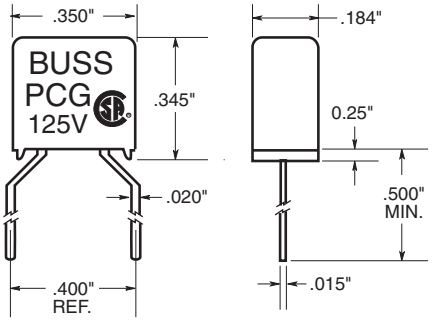


## Time-Current Characteristic Curves–Average Melt

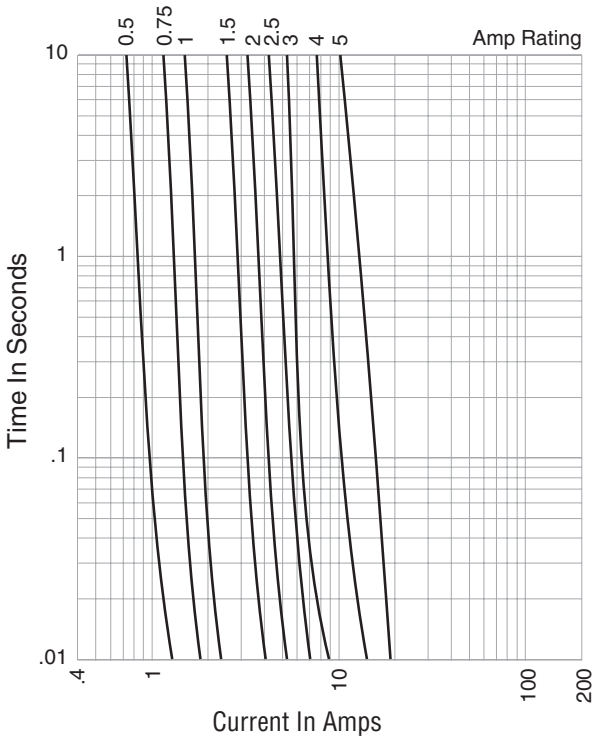


## Max. Total Clearing I²t (Amps² Sec.)

| Amp Rating | 125Vac | | 250Vac | |
|---|---|---|---|---|
| | 50A | 1,000A | 10,000A | 35A & 50A |
| ½A | 0.006 | 0.006 | 0.006 | 0.006 |
| ¾A | 0.016 | 0.016 | 0.016 | 0.016 |
| 1A | 0.020 | 0.020 | 0.020 | 0.020 |
| 1-½A | 0.090 | 0.090 | 0.090 | 0.090 |
| 2A | 0.200 | 0.200 | 0.200 | 0.200 |
| 2-½A | 0.300 | 0.300 | 0.300 | 0.300 |
| 3A | 0.750 | 0.750 | 0.750 | 0.750 |
| 5A | 5.0 | 5.0 | 5.0 | — |

Note: Power Factor > 0.90.

| Packaging Code | |
|---|---|
| **Packaging Code Prefix** | **Description/Quantity** |
| Blank | 5 fuses |
| BK | 100 fuses in a carton |
| TR* | 500 fuses on Tape-and-Reel |

* Only for PCB and PCD

| Option Code | |
|---|---|
| **Option Code Suffix** | **Description** |
| -R | RoHS Compliant |
| -SD | Solder Dipped |

The only controlled copy of this Data Sheet is the electronic read-only version located on the Cooper Bussmann Network Drive. All other copies of this document are by definition uncontrolled. This bulletin is intended to clearly present comprehensive product data and provide technical information that will help the end user with design applications. Cooper Bussmann reserves the right, without notice, to change design or construction of any products and to discontinue or limit distribution of any products. Cooper Bussmann also reserves the right to change or update, without notice, any technical information contained in this bulletin. Once a product has been selected, it should be tested by the user in all possible applications.

Life Support Policy: Cooper Bussmann does not authorize the use of any of its products for use in life support devices or systems without the express written approval of an officer of the Company. Life support systems are devices which support or sustain life, and whose failure to perform, when properly used in accordance with instructions for use provided in the labeling, can be reasonably expected to result in significant injury to the user.

© 2010 Cooper Bussmann
www.cooperbussmann.com

COILTRONICS® COOPER Bussmann® PowerStor®