HTB

1/4" x 1-1/4" and 5 mm x 20 mm Panel-mount fuse holders



Product features

- For 1/4" x 1 1/4" and 5 mm x 20 mm fuses
- All holder bodies have the option of using 1/4" x 1 1/4" or 5 mm x 20 mm carriers
- Withstands 15 Lb-In torque to mounting nut when mounting fuse holder to panel
- High temperature, flame retardant thermoplastic meets UL 94 V-0
- IP53 for -SP option
- Operating temperature: -55 °C to +85 °C

Agency information

- UL Recognized: File E14853, Guide IZLT2,
- CSA: File 47235, Class 6225-01,
- VDE: Certificate 136128 (M version, 5 x 20 mm only)
- CE

Environmental compliance

RoHS

Ordering part number

Fuse holder:

BK-HTB -3 -6 -M -R

(a) (b) (c) (d) (e) (f)

(a) Packaging prefix

(b) Product code

(c) Body configuration and mounting

Knob holders

-2 Low profile (rear panel hex-nut)
-4 High profile
-6 Front panel hex-nut (Profile varies with panel thickness. Holder installs through rear of panel)
-8 Low profile (snap-in)

Screwdriver slotted holders

-3 Low profile
-5 High Profile
-9 Low profile (snap-in)

(d) Rear terminal configuration

-2 Solder or 3/16" Quick-connect (in-line)
-4 Solder or 3/16" Quick-connect (right angle)
-6 Quick-connect (in-line)
-8 Quick-connect (right angle)

(e) Fuse carrier

-I 1/4" x 1 1/4"
-M 5 mm x 2o mm

(f) Option code

-R (RoHS compliant)
-SP (Splash proof (Cap with O-ring, IP53 rating, option on Knob holders only)

Fuse carrier only:

BK-FT M

(g) (h) (i)

(g) Packaging prefix

(h) Product code

FT Knob type for HTB-2, 4, 6, and 8 only
ST Screwdriver slotted type for HTB-3, 5 and 9 only

(i) Fuse carrier

-I 1/4" x 1 1/4"
-M 5 mm x 20 mm

Powering Business Worldwide

Packaging information

Type	Packaging prefix	Description
Fuse holder	blank	10 parts per box, 30 boxes per carton
Fuse holder	BK-	100 parts per box, 4 boxes per carton
Fuse carrier	blank	10 parts per box, 50 boxes per carton
Fuse carrier	BK-	100 parts per polybag, 20 bags per carton

Specifications

Part number	UL Current rating (A)	CSA Current rating (A)	VDE Rated power acceptance (W)	Voltage rating (V)	UL Voltage rating (V)	Fuse size	Quck-connect
HTB-x2I	20	16	na	250	300	1/4" x 1-1/4"	3/16" in-line
HTB-x4I	20	16	na	250	300	1/4" x 1-1/4"	3/16" right-angle
HTB-x6I	20	16	na	250	300	1/4" x 1-1/4"	1/4" in-line
HTB-x8I	20	16	na	250	300	1/4" x 1-1/4"	1/4" right-angle
HTB-x2M	16	16	4	250	300	5 mm x 20 mm	3/16" in-line
HTB-x4M	16	16	4	250	300	5 mm x 20 mm	3/16" right-angle
HTB-x6M	16	16	4	250	300	5 mm x 20 mm	1/4" in-line
HTB-x8M	16	16	4	250	300	5 mm x 20 mm	1/4" right-angle

Dimensions- inches

Knob type

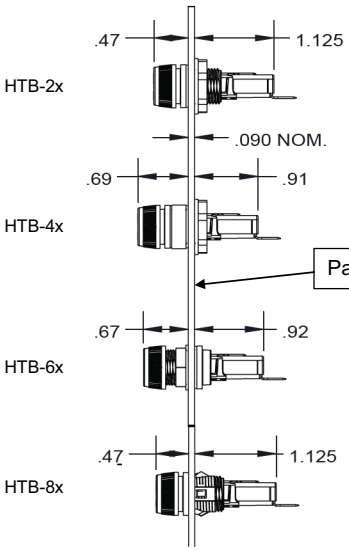

Screwdriver type

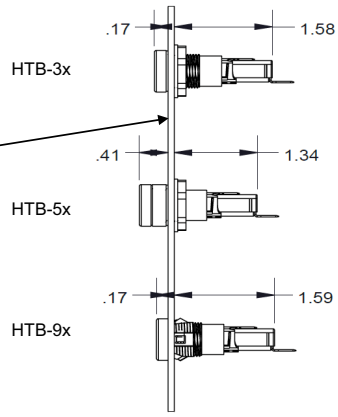

Maximum panel thickness

Body type	Inches	mm
HTB-2x	0.30	7.62
HTB-3x	0.30	7.62
HTB-4x	0.125	3.18
HTB-5x	0.125	3.18
HTB-6x	0.30	7.62
HTB-8x	0.125	3.18
HTB-9x	0.125	3.18

Mounting- inches

HTB-2x, -3x, -4x, -5x and -6x
Double "D" hole or "D" hole

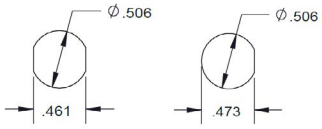

HTB-8 and -9x

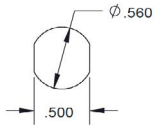

Solder or 3/16"quick connect

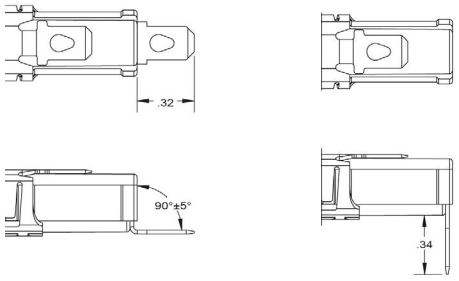

In-line Right-angle

1/4"Quick connect

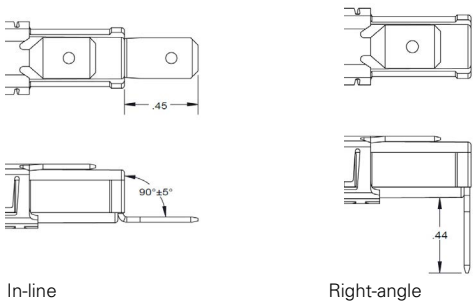

In-line Right-angle

	Solder or 3/16" Quick-connect		1/4" Quick-connect		Carrier options-Knob type	
Knob type	**In-line**	**Right-angle**	**In-line**	**Right-angle**	**1/4" x 1-1/4"**	**5 mm x 20 mm**
HTB-2x	HTB-22I-R	HTB-24I-R	HTB-26I-R	HTB-28I-R	x	-
	HTB-22M-R	HTB-24M-R	HTB-26M-R	HTB-28M-R	-	x
HTB-4x	HTB-42I-R	HTB-44I-R	HTB-46I-R	HTB-48I-R	x	-
	HTB-42M-R	HTB-44M-R	HTB-46M-R	HTB-48M-R	-	x
HTB-6x	HTB-62I-R	HTB-64I-R	HTB-66I-R	HTB-68I-R	x	-
	HTB-62M-R	HTB-64M-R	HTB-66M-R	HTB-68M-R	-	x
HTB-8x	HTB-82I-R	HTB-84I-R	HTB-86I-R	HTB-88I-R	x	-
	HTB-82M-R	HTB-84M-R	HTB-86M-R	HTB-88M-R	-	x

	Solder or 3/16" Quick-connect		1/4" Quick-connect		Carrier options- Screwdriver type	
Screwdriver type	**In-line**	**Right-angle**	**In-line**	**Right-angle**	**1/4" x 1-1/4"**	**5 mm x 20 mm**
HTB-3x	HTB-32I-R	HTB-34I-R	HTB-36I-R	HTB-38I-R	x	-
	HTB-32M-R	HTB-34M-R	HTB-36M-R	HTB-38M-R	-	x
HTB-5x	HTB-52I-R	HTB-54I-R	HTB-56I-R	HTB-58I-R	x	-
	HTB-52M-R	HTB-54M-R	HTB-56M-R	HTB-58M-R	-	x
HTB-9x	HTB-92I-R	HTB-94I-R	HTB-96I-R	HTB-98I-R	x	-
	HTB-92M-R	HTB-94M-R	HTB-96M-R	HTB-98M-R	-	x

Knob

1/4" x 1-1/4"



5 mm x 20 mm



Screwdriver

1/4" x 1-1/4"



5 mm x 20 mm



Replacement parts

HTB-2x, 3x, 4x, 5x, and 8x



BK-1A4287-1

Plastic nut

HTB-2x, 3x, 4x, 5x,

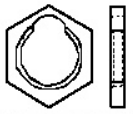

BK-1A4806-2

Metal nut

HTB-6x



BK-1A3322

Metal nut

Life Support Policy: Eaton does not authorize the use of any of its products for use in life support devices or systems without the express written approval of an officer of the Company. Life support systems are devices which support or sustain life, and whose failure to perform, when properly used in accordance with instructions for use provided in the labeling, can be reasonably expected to result in significant injury to the user.

Eaton reserves the right, without notice, to change design or construction of any products and to discontinue or limit distribution of any products. Eaton also reserves the right to change or update, without notice, any technical information contained in this bulletin.

Eaton
Electronics Division
1000 Eaton Boulevard
Cleveland, OH 44122
United States
Eaton.com/electronics

© 2024 Eaton
All Rights Reserved
Printed in USA
Publication No. 2119 PCN24002
January 2024

Eaton is a registered trademark.

All other trademarks are property of their respective owners.

Follow us on social media to get the latest product and support information.

Powering Business Worldwide