Panel-Mount Fuseholder with Bayonet-type Knob
For 13/32″ × 1 5/16″ to 1½″ and SC and Class CC Fuses

HPS Series



Catalog Symbol: HPS, HPS-EE, HPS-FF, HPS-JJ, and HPS-RR
Panel Mount
Agency Information: UL Recognized, Guide IZLT2, File E14853
CSA Certified: Class 6225-01, File 47235
Flammability Rating: UL 94 HB

Electrical Ratings

Catalog Symbol	Amps	Volts AC	Fuse Description
HPS	30[3] [4]	600	13/32″ x 1½″
HPS-L	5	600	BBS, 13/32″ × 1⅜″ fuses.
HPS-EE	15	600	SC 0-15, 13/32″ × 1 5/16″ fuses.
HPS-JJ	20	600	SC 20, 13/32″ × 1 13/32″ fuses.
HPS-F-EE[2]	15	600	Sleeve on body, leaded for 13/32″ × 1 5/16″ fuses.
HPS-FF[2]	30[3]	480	SC 25 & 30, 13/32″ × 1⅝″ fuses.
HPS-RR[2]	30[3]	600	KTK-R, LP-CC, FNQ-R Class CC fuses.
HPS-W[1] [2]	30[3]	600	13/32″ × 1⅝″ fuses.

[1]No UL Recognition
[2]No CSA Certification
[3]20A max when used with quick connect terminals.
[4]HPS rated at 25A for CSA.

Dimensional Data

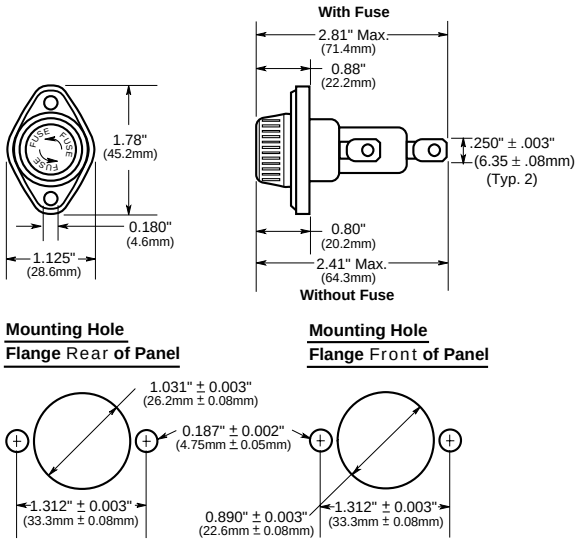

Maximum panel thickness, mounting flange in front of panel

Assumes Pollution Degree 3 per UL 840:
Conductive pollution, or dry, nonconductive pollution that becomes conductive due to condensation that is expected.

Maximum panel thickness *not including any sealing gaskets.*

System Voltage	600V		480		277		240		120	
Fuseholder	mm	Inches	mm	Inches	mm	Inches	mm	Inches	mm	Inches
HPS	1.50	1/32"	2.39	3/32"	6.66	1/4"	7.21	9/32"	8.69	5/8"

Thicker panels may be used if fuse holder load terminal is fully insulated, using a UL recognized (VW-1) insulative heat-shrink tubing, or if anticipated environment is of Pollution Degree 1 or 2, or if panel is nonconductive.

Pollution Degree 2- Normally, only nonconductive pollution. However, a temporary conductivity caused by condensation may be expected.
Pollution Degree 1- No pollution or only dry, nonconductive pollution. The pollution has no influence.

Maximum panel thickness, mounting flange behind the panel: 5.08mm/0.200" (flush to knob collar)

General Information:

- Bayonet-type knob.
- Combination ¼″ quick-connect/solder terminals. (Standard solder type terminals available.)
- The -EE, -JJ, -FF, and -RR holders are UL Recognized for applications requiring branch circuit protection.
- Do not put tension on line (rear) terminal.

CE CE logo denotes compliance with European Union Low Voltage Directive (50-1000Vac, 75-1500Vdc). Refer to Data Sheet: 8002 or contact Bussmann Application Engineering at 636-527-1270 for more information.

The only controlled copy of this Data Sheet is the electronic read-only version located on the Bussmann Network Drive. All other copies of this document are by definition uncontrolled. This bulletin is intended to clearly present comprehensive product data and provide technical information that will help the end user with design applications. Bussmann reserves the right, without notice, to change design or construction of any products and to discontinue or limit distribution of any products. Bussmann also reserves the right to change or update, without notice, any technical information contained in this bulletin. Once a product has been selected, it should be tested by the user in all possible applications.