# HKP

## 1/4" x 1 1/4" Panel-mount fuse holders



Photo is representative

### Product features

- For 1/4" x 1 1/4" (6.3 mm x 32 mm) fuses
- Maximum panel thickness 5/16" (7.9 mm) thick
- Bayonet-type knob
- Vibration resistant
- Standard plastic nut
- Optional metal nut
- Knob 9435-S
- Silicon washer

### Agency information

- cURus Recognized: file E14853, Guide: IZLT2,IZLT8
- CE

### Environmental information

- Rohs compliant
- Weee compliant

### General specifications

- Temperature rating (RTI): The mounting body for all devices has a temperature rating of +150 °C. The knob for these devices are molded plastic with a temperature rating of +150 °C.
- Meets UL 94HB
- Terminal Strength: 5 pounds
- Torque: Mounting: 15 inch-pound maximum
- Salt Spray (corrosion): MIL-STD-202G, Method 101E, Test condition B

### Ordering information

- Specify packaging prefix and product code
- Optional metal nut, order separately part number 1A4806-2 (100 parts minimum)

| | Specifications | | |
|---|---|---|---|
| Product code | Feature | Voltage rating | Current rating |
| HKP-R | Standard | 250 V | 30 A |
| HKP-BBHH-R | ¼" Quick-Connects, nut and washer assembled | 250 V | 30 A |
| HKP-HH-R | ¼" Quick-Connects | 250 V | 30 A |
| HKP-L-R | 2250 V stand-off barrier | 250 V | 30 A |
| HKP-LW-HH-R | Drip-proof knob, 2250 V stand-off barrier and ¼" quick connects[1] | 250 V | 30 A |
| HKP-OO-R | Snap-lock | 250 V | 30 A |
| HKP-W-R | Drip-proof knob[1] | 250 V | 30 A |
| HKP-E-R | Standard with lock washer | 250 V | 30 A |
| HKP-CC-R | Extended panel mount | 250 V | 30 A |

1. IP53 rating for exposed locations

## Dimensions - mm [inches]
Drawing Not to Scale

### HKP-BBHH-R, HKP-HH-R, HKP-LW-HH-R

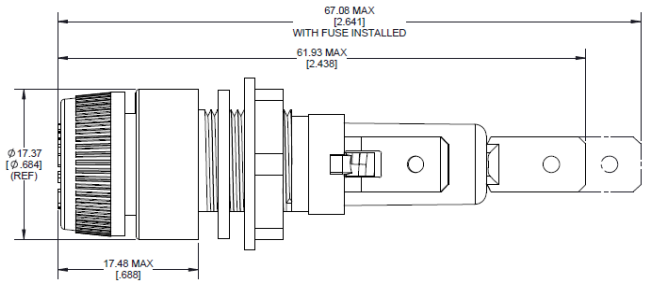


### HKP-R, HKP-L-R, HKP-W-R, HKP-E-R

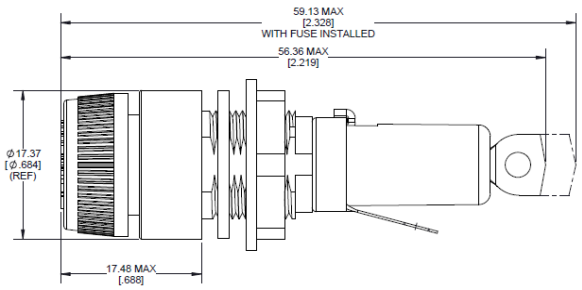


### HKP-CC-R

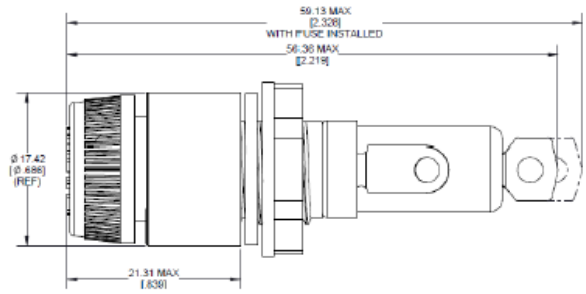


### Mounting: HKP-R, HKP-BBHH-R, HKP-HH-R, HKP-L-R, HKP-LW-HH-R, HKP-W-R, HKP-E-R, HKP-CC-R

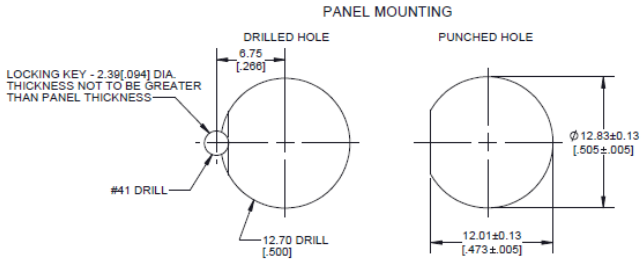


### HKP-OO-R

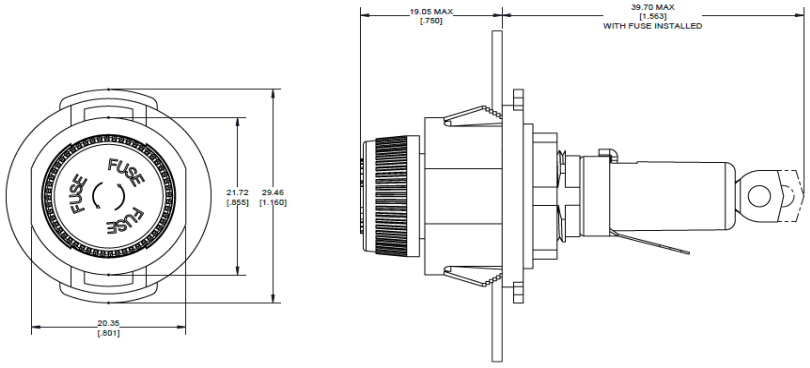


### Mounting: HKP-OO-R

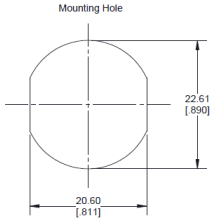


| Packaging | |
|---|---|
| Packaging code prefix | Description |
| BK- | 100 fuseholders with components bagged separately |
| | |

Life Support Policy: Eaton does not authorize the use of any of its products for use in life support devices or systems without the express written approval of an officer of the Company. Life support systems are devices which support or sustain life, and whose failure to perform, when properly used in accordance with instructions for use provided in the labeling, can be reasonably expected to result in significant injury to the user.

Eaton reserves the right, without notice, to change design or construction of any products and to discontinue or limit distribution of any products. Eaton also reserves the right to change or update, without notice, any technical information contained in this bulletin.

**Eaton**
**Electronics Division**
1000 Eaton Boulevard
Cleveland, OH 44122
United States
Eaton.com/electronics

Powering Business Worldwide

© 2025 Eaton
All Rights Reserved
Printed in USA
Publication No. 2106 PCN24029
January 2025

Eaton is a registered trademark.

All other trademarks are property of their respective owners.

Follow us on social media to get the latest product and support information.