COOPER Bussmann

1/4" x 1-1/4" Fuseholders

HKP Panel Mount Series

Description

- For 1/4" x 1-1/4" (6.3mm x 32mm) fuses
- Maximum panel thickness 5/16" (7.9mm) thick
- Bayonet-type Knob
- Vibration Resistant
- Military version is designated FHN26G1
- Plastic nut – BK/1A4287
- Metal nut – BK/1A4806-2
- Cap – 9435-1/2
- Neoprene washer – 9732

RoHS 2002/95/EC



Agency Information

- UL Recognized: IZLT2, E14853
- CSA Component Acceptance: Class 6225-01, File 47235

Ordering

- Specify packaging, product, and option code

Environmental Data

- Temperature rating (RTI): The mounting body for all devices has a temperature rating of 150°C. The knob for these devices are molded plastic with a temperature rating of 150°C.
- Thermoplastic meets UL 94 HB
- Terminal Strength: 5 pounds
- Torque: Mounting – 20 inch-pound
- Salt Spray (corrosion): Test condition B

Dimensions

Drawing Not to Scale

HKP-BBHH, HKP-HH, HKP-LW-HH

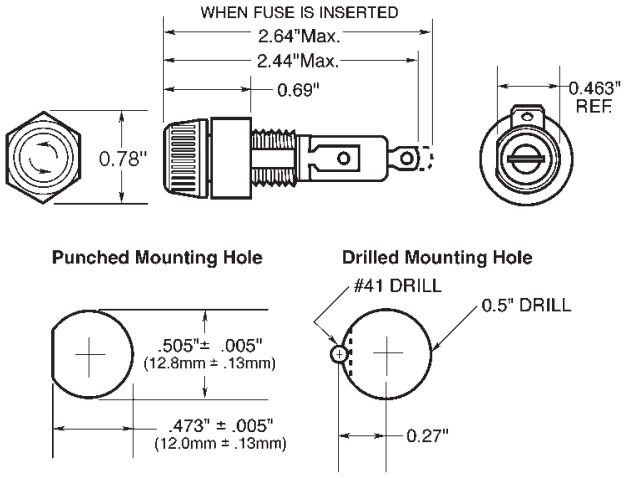

HKP, HKP-L, and HKP-W

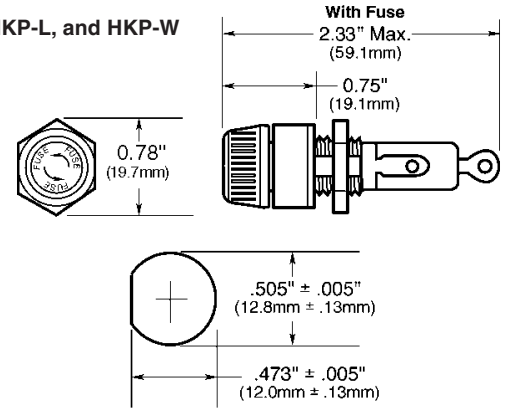

Component	Material
Terminal	Tin-Plated Brass
Body	Thermoset
Cap	Thermoset
Nut	Thermoplastic

HKP-OO

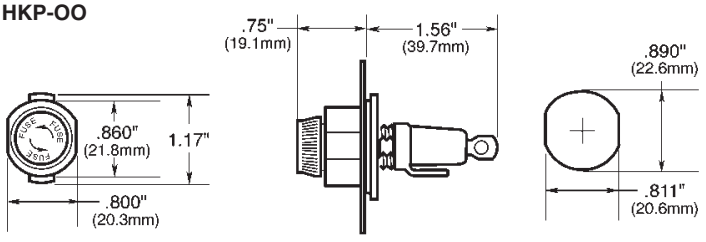

COOPER Bussmann

1/4" x 1-1/4" Fuseholders

HKP Panel Mount Series

SPECIFICATIONS			
Product Code	**Feature**	**Voltage Rating**	**Current Rating**
HKP	Standard	250V	30A
HKP-BBHH	1/4" Quick Connects, nut and washer assembled	250V	20A
HKP-HH	1/4" Quick Connects	250V	20A
HKP-L	2250 stand-off barrier	250V	30A
HKP-LW-HH	Drip-proof knob, 2250V stand-off barrier and 1/4" quick connects	250V	20A
HKP-OO	Snap-lock	250V	30A
HKP-W	Drip-proof knob	250V	30A

PACKAGING CODE	
Packaging Code	**Description**
Blank	10 pieces of fuseholders packed into a carton
BK	100 pieces of fuseholder components packed separately into a carton

OPTION CODE	
Option Code	**Description**
-R	RoHS compliant version

Visit us on the web at:
www.cooperbussmann.com

OC-2579 3/07

© Cooper Electronic Technologies 2007

North America

Cooper Electronic Technologies
1225 Broken Sound Parkway NW
Suite F
Boca Raton, FL 33487-3533
Tel: 1-561-998-4100
Fax: 1-561-241-6640
Toll Free: 1-888-414-2645

Cooper Bussmann
P.O. Box 14460
St. Louis, MO 63178-4460
Tel: 1-636-394-2877
Fax: 1-800-544-2570

Europe

Cooper Electronic Technologies
Cooper (UK) Limited
Burton-on-the-Wolds
Leicestershire • LE12 5TH UK
Tel: +44 (0) 1509 882 737
Fax: +44 (0) 1509 882 786

Cooper Electronic Technologies
Avda. Santa Eulalia, 290
08223
Terrassa, (Barcelona), Spain
Tel: +34 937 362 812
+34 937 362 813
Fax: +34 937 362 719

Asia Pacific

Cooper Electronic Technologies
1 Jalan Kilang Timor
#06-01 Pacific Tech Centre
Singapore 159303
Tel: +65 278 6151
Fax: +65 270 4160