Automotive In-Line Fuseholder
For ATC® Blade-Type Fuses

HHC, HHD, HHF, & HHG



Dimensional Data

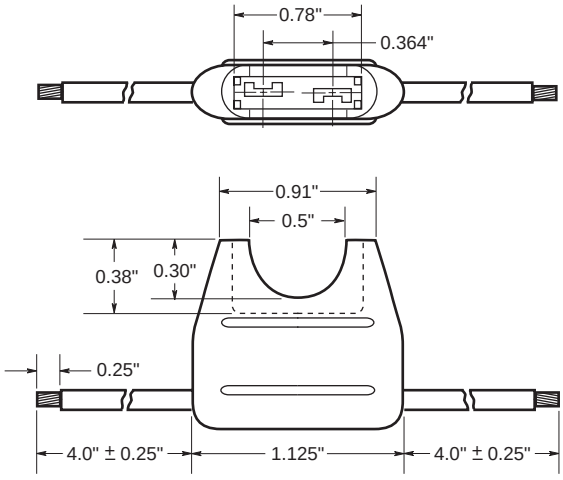

CATALOG SYMBOL: HHC, HHD, HHF, AND HHG
IN-LINE FUSEHOLDERS
RATED 32Vdc MAXIMUM
CURRENT RATING: See Table

COVER FOR HHD FUSEHOLDER

CATALOG SYMBOL:
HHD-C

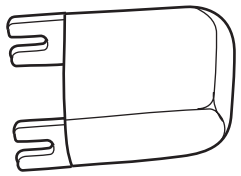

Electrical Ratings

Catalog Symbol	Description	Fuse Size	Electrical Connection	Maximum Continuous Current Rating
HHC	Yellow fuseholder	3-20A	#16 black leadwire	16A*
HHD	Black fuseholder	3-30A	#12 yellow leadwire	24A*
HHD-C	Cover only	Fits HHD only	Clear polycarbonate	
HHF	Black fuseholder with cover	3-20A	#16 yellow leadwire	16A*
HHG	Black fuseholder with cover	3-30A	#12 yellow leadwire	24A*

* Or 80% of fuse rating, whichever is less.
• For ATC® blade-type fuses.
• “Write-in” space for circuit identification on HHC holders (bright yellow).

Bulk Products
(Bulk Quantity - 1000 pieces)

Catalog Symbol	Description	Fuse Size	Electrical Connection	Maximum Continuous Current Rating
BK/HHC-R	Yellow fuseholder	3-20A	#16 red leadwire	16A*
BK/HHF-B	Black fuseholder with cover	3-20A	#16 black leadwire	16A*

* Or 80% of fuse rating, whichever is less.

A fuse must be properly and fully inserted into the holder to provide a solid connection. Poor or improper insertion of the fuse can result in failure of the fuse and holder, thus not protecting the device for which it was intended.

The only controlled copy of this Data Sheet is the electronic read-only version located on the Bussmann Network Drive. All other copies of this Data Sheet are by definition uncontrolled. This bulletin is intended to clearly present comprehensive product data and provide technical information that will help the end user with design applications. Bussmann reserves the right, without notice, to change design or construction of any products and to discontinue or limit distribution of any products. Bussmann also reserves the right to change or update, without notice, any technical information contained in this bulletin. Once a product has been selected, it should be tested by the user in all possible applications.