GMW (fuse) HWA (fuse holder)

Specialty fuse fast-acting and fuse holder

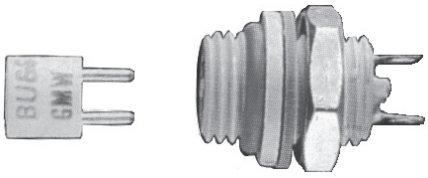

Catalog symbol: GMW (fuse) HWA (fuse holder)
Ampere Rating: 1/100 - 5 A
Voltage Rating: 125 Volts AC or less
Interrupting Rating: 35 A

Agency information

Fuse

UL® Recognized, Guide JDYX2, File E19180

Fuse holder

- UL Recognized, Guide IZLT2, File E14853 **HLR-2A and**

Product features

- Can be soldered direct into circuit or can be mounted in HWA holder which can be soldered into circuit.
- Transparent window in fuse for visual determination of open fuse element
- Fuseholder body and knob material is diallyl phthalate
- Holder includes "O"-ring, gasket, and nut
- Type HWA-AF holder includes waterproof cap (knob) AF
- Sub-miniature pin-base fuses for limited space applications

Carton quantity

Amp ratings	Carton qty.
GMW 1/100–5	100
HWA fuse holder	100
AF knob	100

- Sub-miniature pin-base fuses for limited space applications

Catalog numbers

125 Volts		
GMW-1/100	GMW-1/4	GMW-1-1/2
GMW-1/64	GMW-3/10	GMW-2
GMW-1/32	GMW-4/10	GMW-3
GMW-1/16	GMW-1/2	GMW-4
GMW-1/10	GMW-6/10	GMW-5
GMW-1/8	GMW-3/4	—
GMW-2/10	GMW-1	—

Electrical characteristics

Load	Opening time
100%	4 hrs. (min.)
200%	10 sec. (max.)

Dimensions - in (mm):

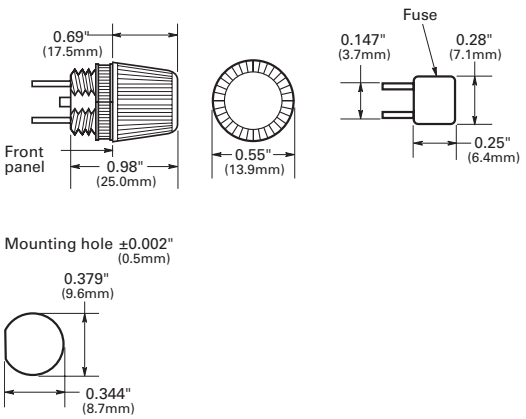

Time-current curves – average melt

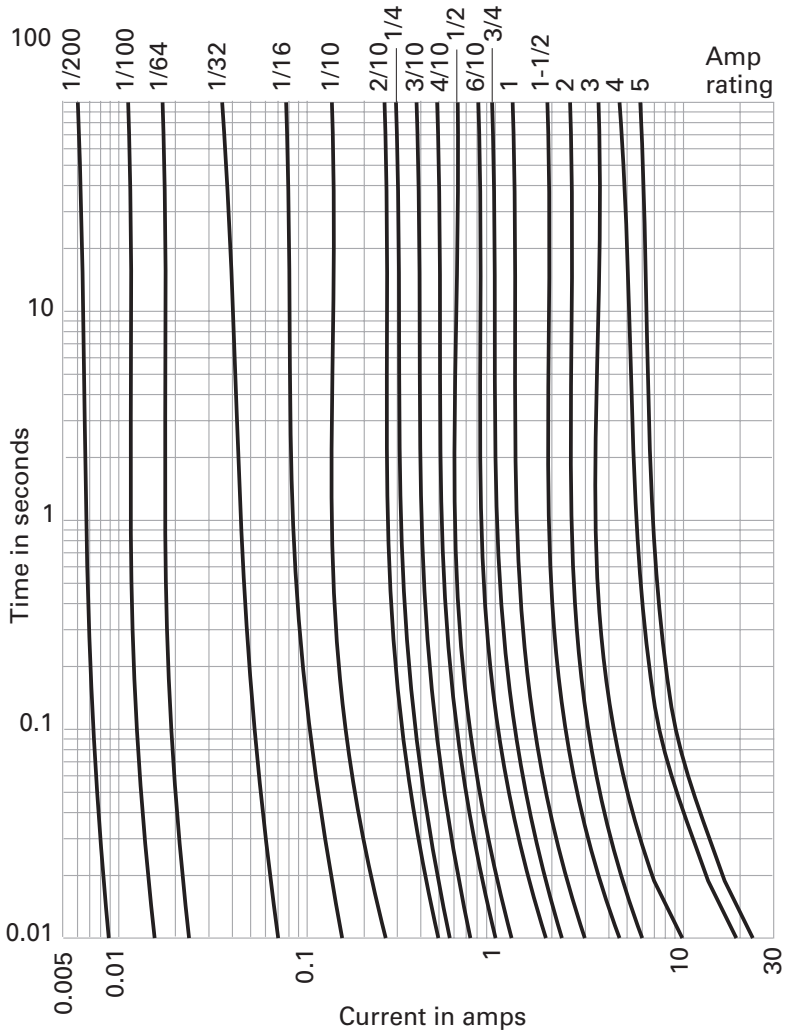

Life Support Policy: Eaton does not authorize the use of any of its products for use in life support devices or systems without the express written approval of an officer of the Company. Life support systems are devices which support or sustain life, and whose failure to perform, when properly used in accordance with instructions for use provided in the labeling, can be reasonably expected to result in significant injury to the user.

Eaton reserves the right, without notice, to change design or construction of any products and to discontinue or limit distribution of any products. Eaton also reserves the right to change or update, without notice, any technical information contained in this bulletin.

Eaton
Electronics Division
1000 Eaton Boulevard
Cleveland, OH 44122
United States
www.eaton.com/electronics

© 2017 Eaton
All Rights Reserved
Printed in USA
Publication No. 2058 BU-SB98107
August 2017

Eaton is a registered trademark.

All other trademarks are property
of their respective owners.

Powering Business Worldwide