COOPER Bussmann

PCB Fuseclips for ATC/ATM Blade, 5mm, 1/4" & 13/32" Diameter Fuses

1AXXXX Series

For 1/4" Diameter Fuses

1A1119 Series
With End Stops and Angled-In leads
Dimensions - in (mm)

RoHS

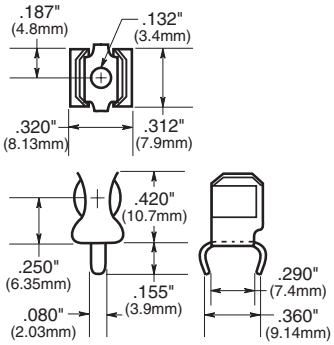

Catalog Number*	Clip Mat.**	Finish
1A1119-04	High Performance Cu†	Bright Tin
1A1119-05	High Performance Cu†	Silver
1A1119-10	Cart. Brass	Bright Tin

* For RoHS compliant version of "-04" and "-10" add "-R" option code suffix to part number. 1A1119-05 is RoHS compliant.
** High Performance Cu = High Performance Copper, Cart. Brass = Cartridge Brass
† High Performance Cu recommended for currents higher than 15 amps.

1A1120 Series
Without End Stops and Angled-In Leads
Dimensions - in (mm)

RoHS

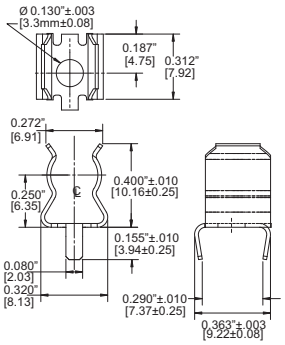

Catalog Number*	Clip Mat.**	Finish
1A1120-02	Cart. Brass	Bright Dip
1A1120-05	High Performance Cu†	Silver
1A1120-06	High Performance Cu†	Bright Tin
1A1120-09	Cart. Brass	Bright Tin

* For RoHS compliant version of "-02," "-06" and "-09" add "-R" option code suffix to part number. 1A1120-05 is RoHS compliant.
** High Performance Cu = High Performance Copper, Cart. Brass = Cartridge Brass
† High Performance Cu recommended for currents higher than 15 amps.

1A1907 Series
With End Stops & Straight Leads
Dimensions - in (mm)

RoHS

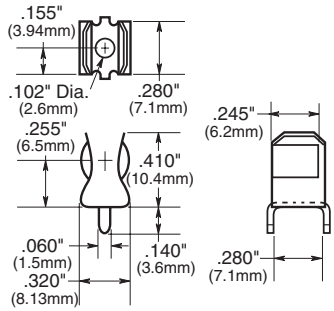

Catalog Number*	Clip Mat.**	Finish
1A1907-02	Cart. Brass	None Bright Dipped
1A1907-03	High Performance Cu†	Bright Tin
1A1907-05	High Performance Cu†	Silver
1A1907-06	Cart. Brass	Bright Tin

* For RoHS compliant version of "-02, ""-03" and "-06" add "-R" option code suffix to part number. 1A1907-05 is RoHS compliant.
** High Performance Cu = High Performance Copper, Cart. Brass = Cartridge Brass
† High Performance Cu recommended for currents higher than 15 amps.

1A3398 Series
Without End Stops & Straight Leads
Dimensions - in (mm)

RoHS

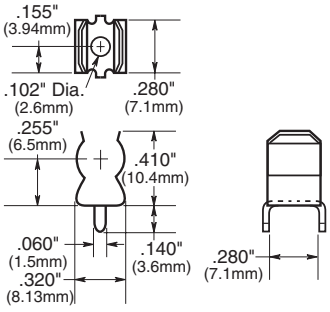

Catalog Number*	Clip Mat.**	Finish
1A3398-07	Cart. Brass	Bright Tin

* For RoHS compliant version of "-07" add "-R" option code suffix to part number.
** Cart. Brass = Cartridge Brass

1A4534 Series
With End Stops & Angled Out Leads
Dimensions - in (mm)

RoHS

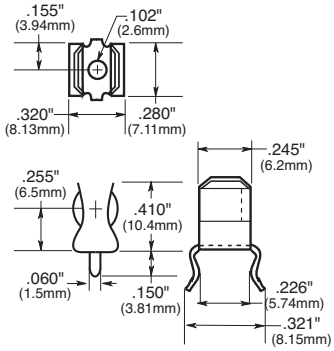

Catalog Number*	Clip Mat.**	Finish
1A4534-01	High Performance Cu†	Bright Tin
1A4534-06	Cart. Brass	Bright Tin

* For RoHS compliant version add "-R" option code suffix to part number.
** High Performance Cu = High Performance Copper, Cart. Brass = Cartridge Brass
† High Performance Cu recommended for currents higher than 15 amps.

1A4533 Series
Without End Stops & Angled Out Leads
Dimensions - in (mm)

RoHS

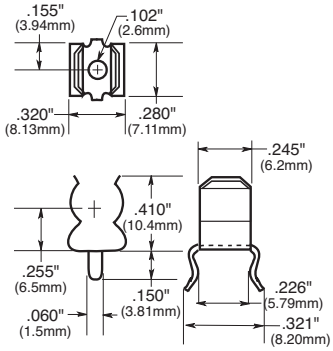

Catalog Number*	Clip Mat.**	Finish
1A4533-01	High Performance Cu†	Bright Tin
1A4533-06	Cart. Brass	Bright Tin

* For RoHS compliant version add "-R" option code suffix to part number.
** High Performance Cu = High Performance Copper, Cart. Brass = Cartridge Brass
† High Performance Cu recommended for currents higher than 15 amps.

PCB Fuseclips for ATC/ATM Blade, 5mm, 1/4" & 13/32" Diameter Fuses

1AXXXX Series

For 5mm Diameter Fuses

1A5601 Series (0 to 7 amps)
Dimensions - in (mm)

RoHS

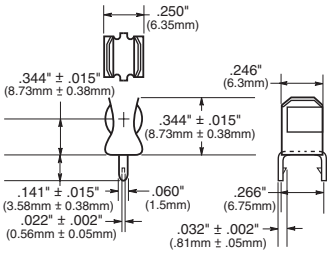

Catalog Number	Clip Mat.*	Finish
1A5601	Cart. Brass	Bright Tin

* Cart. Brass = Cartridge Brass

1A5602 Series (0 to 7 Amps)
Dimensions - in (mm)

RoHS

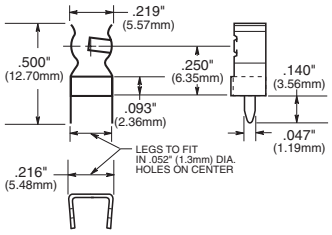

Catalog Number	Clip Mat.*	Finish
1A5602	Cart. Brass	Bright Tin

* Cart. Brass = Cartridge Brass

1A3399 and 1A5018 Series
With Straight Leads
Dimensions - in (mm)

RoHS

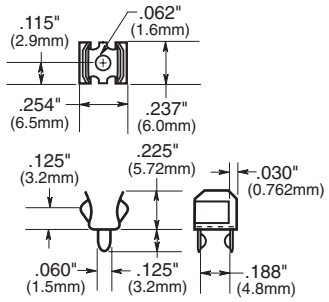

Catalog Number*	Clip Mat.**	Finish
1A3399-10	Spg. Br.	Bright Tin
1A3399-01	BeCu†	Silver
1A3399-04	BeCu†	Bright Tin

* For RoHS compliant version of "-10" and "-04" add "-R" option code suffix to part number. 1A3399-01 is RoHS compliant.
** Spg. Br. - Spring Bronze, BeCu = Beryllium Copper
† Beryllium Copper recommended for currents higher than 15 amps.

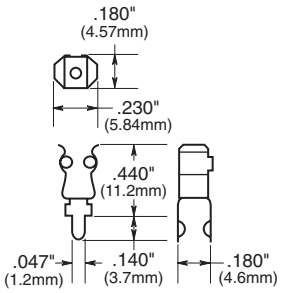

High Profile

Catalog Number*	Clip Mat.**	Finish
1A5018-10	Spg. Br.	Bright Tin
1A5018-07	Spg. Br.	Silver

* For RoHS compliant version of "-10" add "-R" option code suffix to part number. 1A5018-07 is RoHS compliant.
** Spg. Br. - Spring Bronze

Specifications

5mm PCB Mount Fuseclips
Current Rating: 15A
Voltage Rating: 500Vac
PCB Terminals: Solder Lug

For 13/32" Diameter Fuses

1A3400 Series
With End Stops & Straight Leads
Dimensions - in (mm)

RoHS

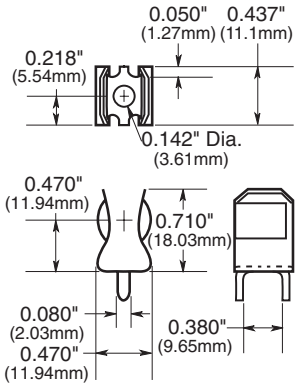

1A3400-09 & 1A3400-10

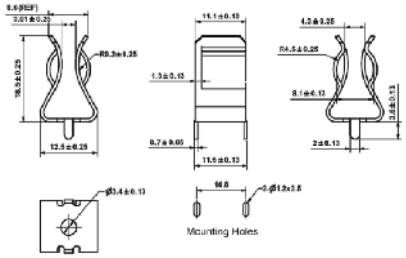

1A3400-12

Specifications:

Catalog Number*	Clip Material	Finish	Amp Rating
1A3400-09	Copper-Clad Steel	Bright Tin	20A Max.
1A3400-10	Copper-Clad Steel	Silver	30A Max.
1A3400-12	Spring Brass	Bright Tin	15A Max.

* For RoHS compliant version of "-09" and "-12" add "-R" option code suffix to part number. 1A3400-10 is RoHS compliant.

PCB Fuseclips for ATC/ATM Blade, 5mm, ¼" & 13/32" Diameter Fuses

1AXXXX Series

ATM Fuses
1A5778 Series
Dimensions - mm (in)

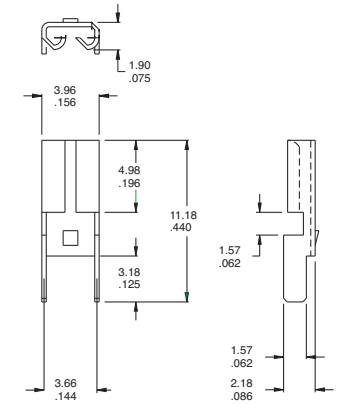

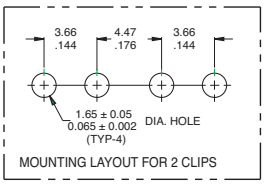

MATERIAL: BRASS, NICKEL PLATED, $^{.30}_{.012}$ THICK

1A5779 Series

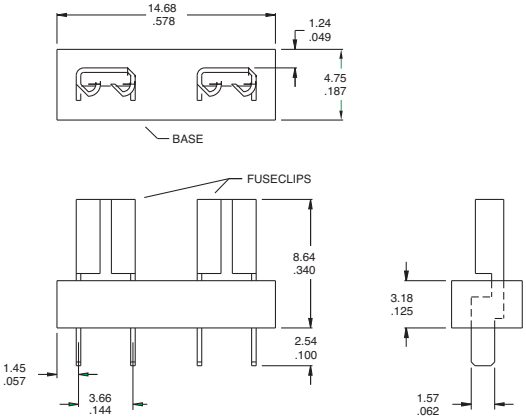

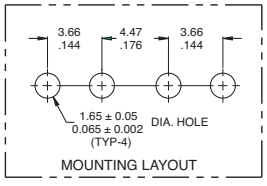

SPECIFICATIONS

FUSECLIPS	BRASS, NICKEL PLATED
BASE MATERIAL	GLASS FILLED NYLON, UL RATED 94V-0
CURRENT RATING	15 AMPS
VOLTAGE RATING	500V AC
TEMPERATURE RATING	-50°C TO 145°C / -58°F TO 292°F

ATC Fuses (0 to 20 Amps)
1A5600 Series
Dimensions - in (mm)

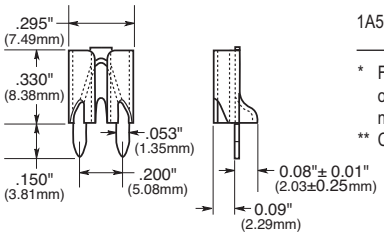

Catalog Number*	Clip Mat.**	Finish
1A5600	Cart. Brass	Satin Finish Tin

* For RoHS compliant version add "-R" option code suffix to part number. 1A3399-01 is RoHS compliant.
** Cart. Brass = Cartridge Brass

1A5780 Series
Dimensions - mm (in)

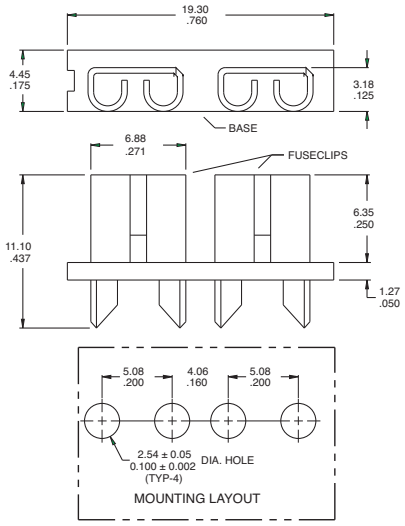

SPECIFICATIONS

FUSECLIPS	BRASS, NICKEL PLATED
BASE MATERIAL	GLASS FILLED NYLON, UL RATED 94V-0
CURRENT RATING	15 AMPS
VOLTAGE RATING	500V AC
TEMPERATURE RATING	-50°C TO 145°C / -58°F TO 292°F

COOPER Bussmann

PCB Fuseclips for ATC/ATM Blade, 5mm, 1/4" & 13/32" Diameter Fuses

1AXXXX Series

Fuseclip Catalog Numbers

Recommended Pad Layout Dimensions - in (mm)

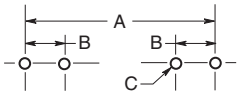

Dimensions

Catalog Number	A						ATC	ATM	B	C	Board
	7/8" (22.2mm)	1" (25.4mm)	1 1/4" (31.8mm)	1 3/8" (34.93mm)	1 1/2" (38.10mm)	20mm	—	—	Tabs	(4 holes)	Thickness
1A5778-	—	—	—	—	—	—	—	0.464" (11.79)	0.144" (3.66)	0.065"±0.002" (1.65±0.05)	0.062" (1.57)
1A5779-	—	—	—	—	—	—	—	0.464" (11.79)	0.144" (3.66)	0.065"±.002" (1.65±.05)	0.062" (1.57)
1A5780-	—	—	—	—	—	—	0.560 (14.22)	—	0.200" (5.08)	0.100"±0.002" (2.54±0.05)	0.062" (1.57)
1A3398- 1A1907-	1.00" (25.40)	1.125" (28.58)	1.375" (34.920)	—	—	—	—	—	0.295"-0.305" (7.49-7.75)	0.067"-.070" (1.70-1.78)	0.093" (2.36)
1A1119-	1.00" (25.40)	1.125" (28.58)	1.375" (34.92)	—	—	—	—	—	0.295"-0.305" (7.49-7.75)	0.093"±0.002" (2.36±0.05)	0.062" to 0.125" (1.57to3.18)
1A1120-	1.00" (25.40)	1.125" (28.58)	1.375" (34.920)	—	—	—	—	—	0.295"-0.305" (7.49-7.75)	0.093"±0.002" (2.36±0.05)	0.062" to 0.125" (1.57 to 3.18)
1A3399-	—	—	—	—	—	0.875" (22.23)	—	—	0.200" (5.08)	0.067"-.070" (1.70-1.78)	093" (2.36)
1A3400-	—	—	—	1.50" (38.10)	1.625"— (41.28)		—	—	0.405" (10.29)	0.091"-.095" (2.31-2.41)	0.125" (3.18)
1A4533-	1.00" (25.40)	1.125" (28.58)	1.375" (34.920)	—	—	—	—	—	0.300" (7.62)	0.067"-.070" (1.70-1.78)	0.062" (1.57)
1A4534-	1.00" (25.40)	1.125" (28.58)	1.375" (34.920)	—	—	—	—	—	0.300" (7.62)	0.067"-.070" (1.70-1.78)	0.062" (1.57)
1A5018-	—	—	—	—	—	0.820"±0.015" (20.80±0.38)	—	—	0.180" (4.6)	0.053"-.002" (1.35-0.05)	0.093" (2.36)
1A5600-	—	—	—	—	—	—	—	—	0.200" (5.08)	0.052"±0.003" (1.32±0.077)	0.125"max. (3.18)
1A5601-	—	—	—	—	—	0.820"±0.015" (20.80±0.38)	—	—	0.266" (6.76)	0.067"±0.003" (1.70±0.074)	0.062" (1.57)
1A5602-	—	—	—	—	—	—	—	—	0.220" (5.588)		0.125"max. (3.175)

The only controlled copy of this Data Sheet is the electronic read-only version located on the Bussmann Network Drive. All other copies of this document are by definition uncontrolled. This bulletin is intended to clearly present comprehensive product data and provide technical information that will help the end user with design applications. Bussmann reserves the right, without notice, to change design or construction of any products and to discontinue or limit distribution of any products. Bussmann also reserves the right to change or update, without notice, any technical information contained in this bulletin. Once a product has been selected, it should be tested by the user in all possible applications.

© 2014 Bussmann
www.cooperbussmann.com