Date	SYM	REVISION RECORD	AUTH	DR.	CK.
3/04/11	B	ADDED DIM. 3.30 AND 1.04	T.B.	B.S.	
04/20/12	C	ADDED INSULATOR OUTLINE IN PCB LAYOUT	T.B.	B.S.	
05/25/12	D	ADDED DIM. .570	T.B.	B.S.	

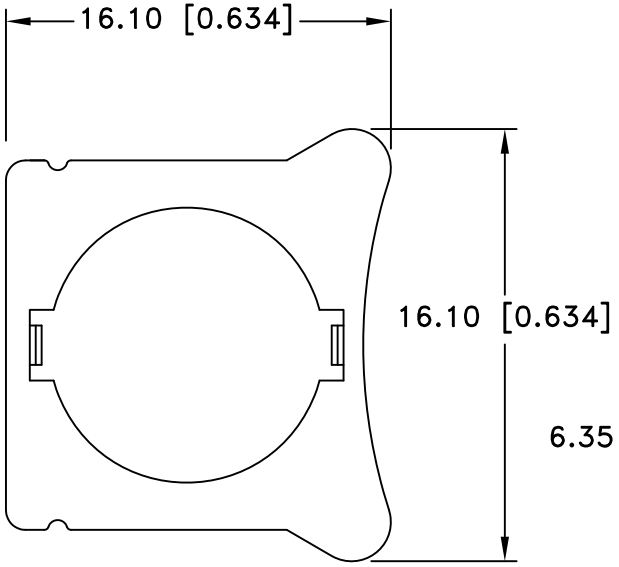

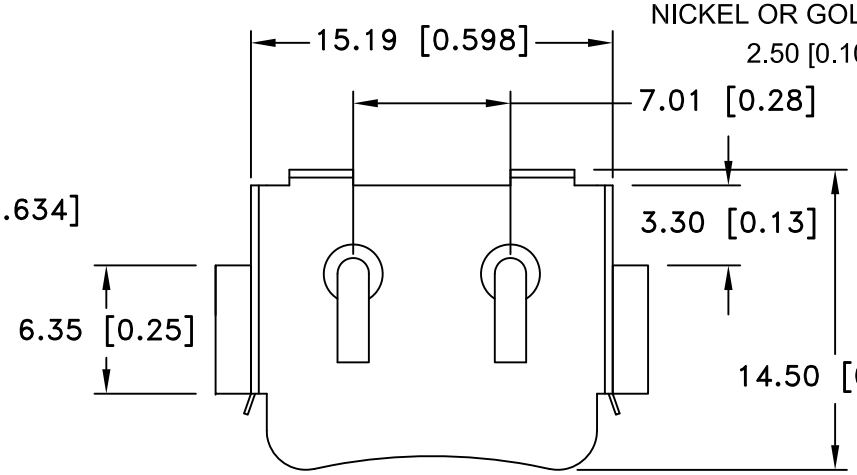

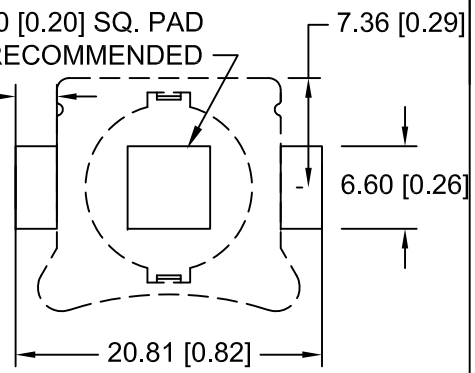

PCB LAYOUT

INSULATOR

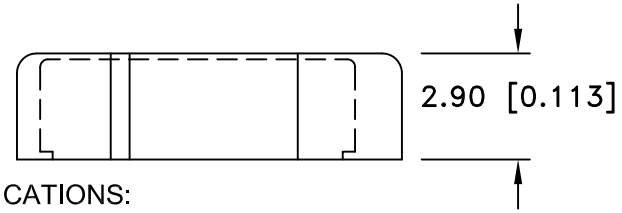

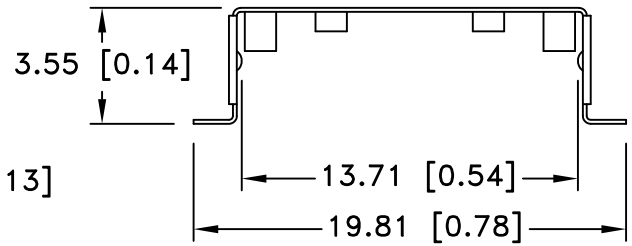

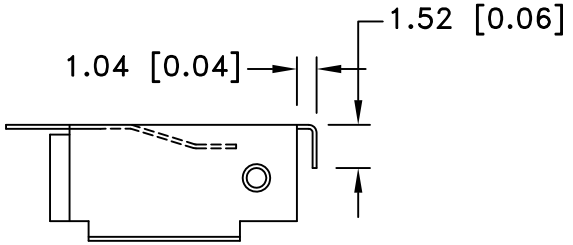

SPECIFICATIONS:

* Holder material- Polypropylene, AV161 PP, Off White
* UL Flamability Rating: UL 94-HB File No. E108370
* Contacts : Phosphor Bronze C5191, Nickel Plated 80-150u thickness
* Vibration test: 10-50-10 hz sweeped in 60 seconds
  x,y,z direction: 1 hour each direction
* Result: no dislodgement of the cell or damage
  no discontinuity over 10 micro-seconds
* Shock test: half sine wave acceleration 150g.
  6 micro-seconds 3 shock pulses each direction per axis,
  total of 18 pulses
* Result: no evidence of physical damage
* ROHS COMPLIANT

Tolerance (Except as noted)	MPD Memory Protection Devices, Inc 200 Broad Hollow Road, Farmingdale, New York 11735		
decimal ±.5 (.020)		Scale	Drawn By B.S. Approved By T.B.
Fractional ± .8 (.030)	Title CR1225 BATTERY RETAINER WITH INSULATOR		
Angular ± 3°	Date 05/25/12	Drawing Number BHX1-1225-SM	