bulgin

a brand of Elektron Technology

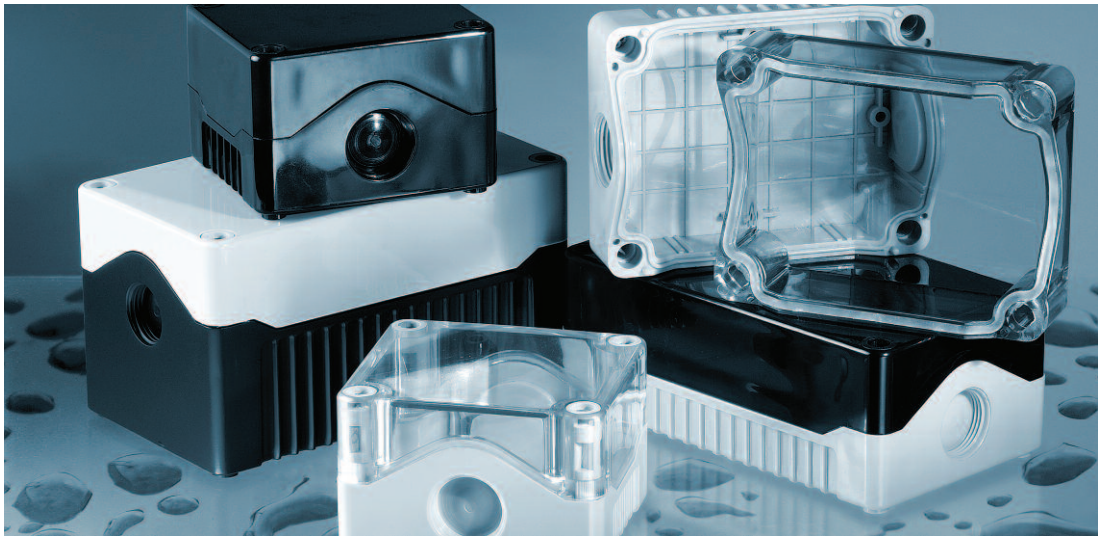

IP67

BE Enclosures

A range of environmentally sealed plastic enclosures suitable for internal and external applications where protection from dust and water are a central requirement to system performance.

Designed for use with control switches and equipment, they are available with lids that have pre-moulded cut-outs to accept industry standard 22mm switches and bases with M20 threaded cut-outs to suit standard cable glands.

Size 1 Enclosure



BEA01S - ABS
BEP01S - Polycarbonate

- Dimensions: 80 x 72 x 53mm
- Slotted mounting holes, 66.2 x 58.8mm
- 2 x M20 threaded knock-outs suitable for use with M20 glands
- Option for single pre-drilled 22mm Ø hole in lid
- PCB mounting posts suitable for M3 self tapping screws
- ABS or Flame Retardant Polycarbonate material options
- Grey or black base
- Transparent, black, grey or yellow lid

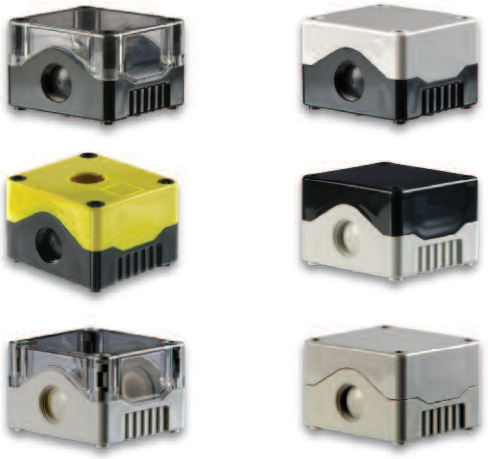

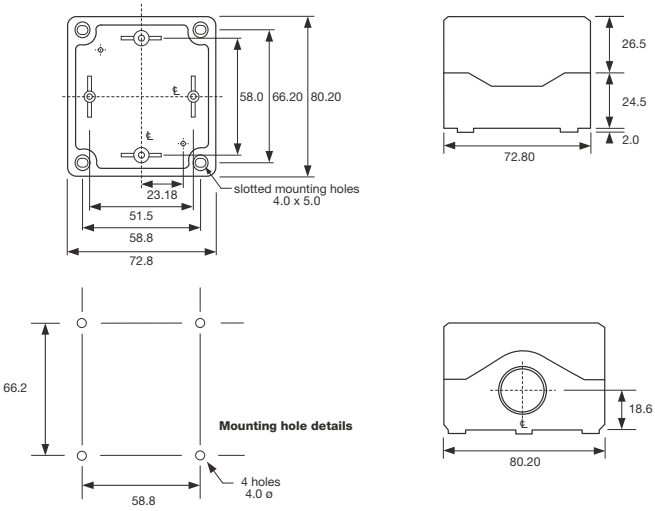

Size 2 Enclosure



BEA02S - ABS
BEP02S - Polycarbonate

- Dimensions: 80 x 106 x 53mm
- Slotted mounting holes, 66.2 x 92.0mm
- 2 x M20 threaded knock-outs suitable for use with M20 glands
- Option for two pre-drilled 22mm Ø holes in lid
- PCB mounting posts suitable for M3 self tapping screws
- ABS or Flame Retardant Polycarbonate material options
- Grey or black base
- Transparent, black, grey or yellow lid

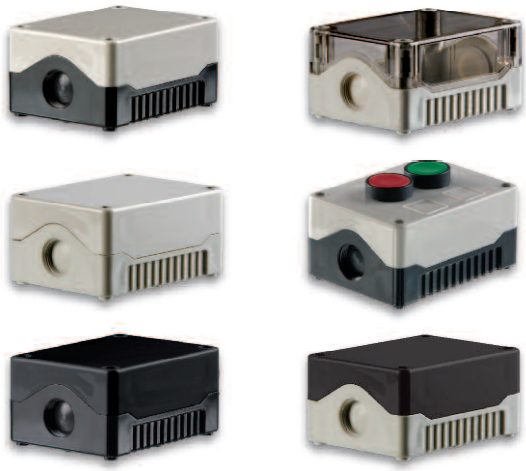

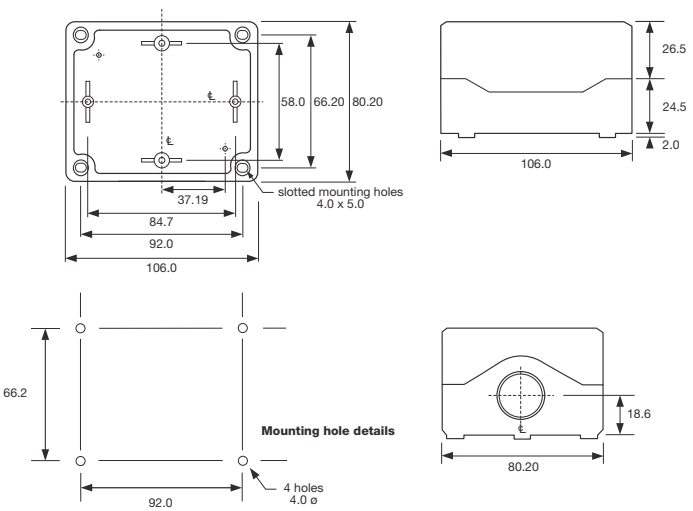

Size 3 Enclosure



BEA03S - ABS
BEP03S - Polycarbonate

- Dimensions:z 80 x 139 x 53mm
- Slotted mounting holes, 66.2 x 125mm
- 2 x M20 threaded knock-outs suitable for use with M20 glands
- Option for three pre-drilled 22mm Ø holes in lid
- PCB mounting posts suitable for M3 self tapping screws
- ABS or Flame Retardant Polycarbonate material options
- Grey or black base
- Transparent, black, grey or yellow lid

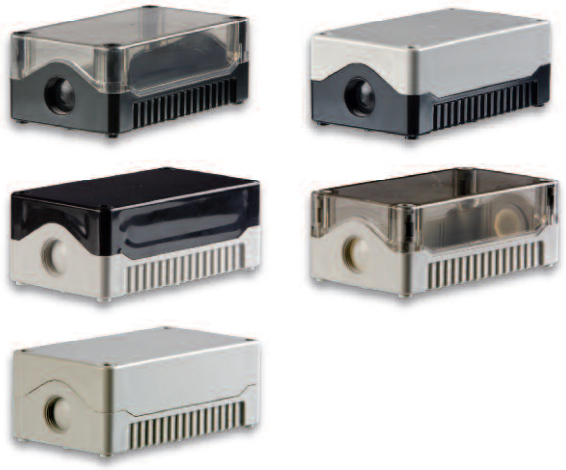

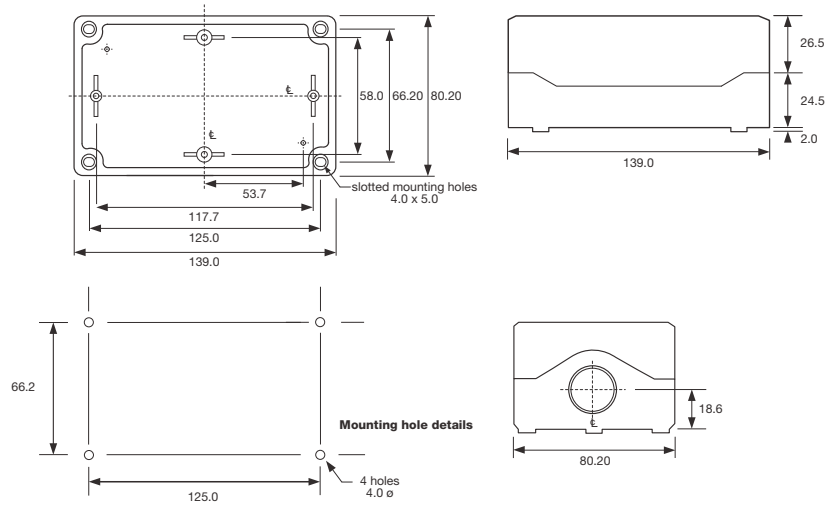

Accessories

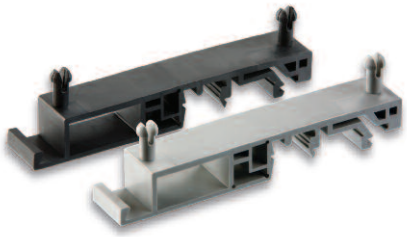

Combifoot rail mounting accessory

- Easy snap fixing to enclosure
- Suitable for TS32 & TS35 rails
- Available in black or grey
- Part numbers:
  Grey - BE123456
  Black - BE123457



Wall mounting accessory

- Easy snap fixing to enclosure
- For easy access wall mounting
- Available in black or grey
- Part numbers:
  Grey - BE123458
  Black - BE123459



Cable glands

- For use in pre-moulded knock-outs
- M20 thread
- Cable range 3.5-8mm
  Supplied with gasket
- Available in black or grey
  Part numbers:
  Grey - BE123460
  Black - BE123461

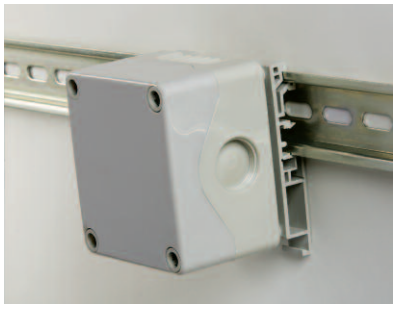

BE Enclosures

Specifications

	BEAxxx	BEPxxx
Sealing:	IP67	IP67
Material:	ABS	Polycarbonate
Flammability rating:	UL94HB	UL94V-0
Gasket	TPE	TPE
Temperature rating:	–20°C to +85°C	–20°C to +100°C

Features

- IP67 rated, dust and waterproof for short-term submersion to 1m depth
- Two materials, Polycarbonate - UL94V-0 rated or ABS - UL94HB rated
- Threaded M20 knock-outs, premoulded areas that can be pushed out for use with M20 size cable glands
- Plastic lid fixing screws, corrosion resistant
- Captive lid screws, standard on all lids
- Additional pre-drilled 22mm holes in the lid may be specified, suitable for standard switches and indicators
- PCB mounting, mounting posts and slots for PCB as standard
- Self tapping screw fixing, standard feature
- Transparent top cover, available in clear and smoke grey
- Accessories:
  Wall mounting brackets
  Combifoot - TS32 & TS35 din rail mounting
  M20 cable glands for use in knock-outs
- Registered design

Part No System

BE A 01S B T 1

Material
A = ABS - UL94HB
P = Polycarb - UL94V-0

Size
01S = 80 x 72 x 53
02S = 80 x 106 x 53
03S = 80 x 139 x 53

Base Colour
B = black
G = grey

Lid Colour
B = black
G = grey
Y = yellow
T = transparent

Pre-drilled Lid Holes
0 = no holes
1 = with hole(s) (1 x 22mmØ Size 1, 2 x 22mmØ Size 2 & 3 x 22mmØ Size 3 Enclosures)

Part number example:
BEA02SGT0 = Size 2, ABS material, grey base, transparent lid with no holes

bulgin
a brand of Elektron Technology

Europe

Elektron Technology
Woodland Road, Torquay
Devon, UK TQ2 7AY
T +44 (0)1803 407700
F +44 (0)1803 407699
W bulgin.com
E europe@elektron-technology.com

The Americas

Elektron Technology
31-315 Plantation Drive
Thousand Palms, California 92276, USA
T 760-343-3650
F 760-343-3445
W bulgin.com
E americas@elektron-technology.com

China and Asia

Elektron Technology
A2, No.23, Xin Buxin Road
Tongle Community, Longgang Street
Longgang District, Shenzhen, China
T +86 755 3328 8988
F +86 755 3328 8878
W bulgin.com
E asia@elektron-technology.com

V1.0