BROADCOM®

Connecting

BCM5395 PRODUCT Brief

5-PORT GbE SWITCH WITH FIVE INTEGRATED PHYS AND PACKET BUFFER

FEATURES

- Highly integrated, non-blocking, 5-port 10/100/1000 switch silicon that integrates:
  - Five integrated 10/100/1000 PHYs
  - One GMII/RGMII interface for an In-band Management Port (IMP) for glueless connection to a CPU/management entity
  - Serial EEPROM, MDC/MDIO, SPI, and Interrupt-to-CPU Interface
- LoopDTech™ and CableChecker™ reduce network down time and minimize support effort
  - Broadcom's patented LoopDTech technology for loop detection without running spanning tree protocol
  - Broadcom's CableChecker enables advanced cable diagnostics based on Broadcom's convergence algorithm
- VLAN
  - IEEE 802.1Q-based VLAN with 4K entries
  - VLAN double-tagging (Q-in-Q)
- QoS
  - Four selectable CoS per port: SP and WRR
  - Port, MAC, 802.1P, and IPv4/IPv6 DSCP based QoS
- Performance
  - 9 KB jumbo frame support—wirespeed performance for all frame sizes
  - 4K MAC addresses with automatic learning and aging
- Security
  - IEEE 802.1x support for secure user authentication
  - DoS prevention hardware
- Traffic control and network resiliency
  - Storm control and port-based ingress/egress rate control
  - Spanning tree support (rapid spanning tree and multiple spanning trees—up to 16)
- BroadSync™ HD (AV bridging)
  - Frame timer in MAC
  - Real-time clock module for master clock generation and time sync
- Management
  - On-chip MIB counters to collect, receive, and transmit statistics for each port. Hardware support for SNMP/MIBs and RMON.

SUMMARY OF BENEFITS

- Provides a flexible solution for the cost-optimized board and system designs
- Additional interfaces enable efficient designs for the branch office switch applications. Flexible CPU interface allows the BCM5395 to work with any CPU.
- Supports all types of client connections, including VoIP, video, multimedia, and data. Proper priority can be assigned to each traffic type to ensure guaranteed delivery of time-sensitive packets and efficient use of network bandwidth.
- Access Control List (ACL) provides the security vehicle for frame classification and filtering.
- IGMP and MLD snooping enables multicast switching without expensive L3 multicast routing.
- BroadSync HD provides quality of service for audio-video packs through Ethernet by adding end-to-end bandwidth reservation, admission control, timing, and synchronization.
- Switch can be completely managed remotely using SNMP, RMON, and OAM.

OVERVIEW

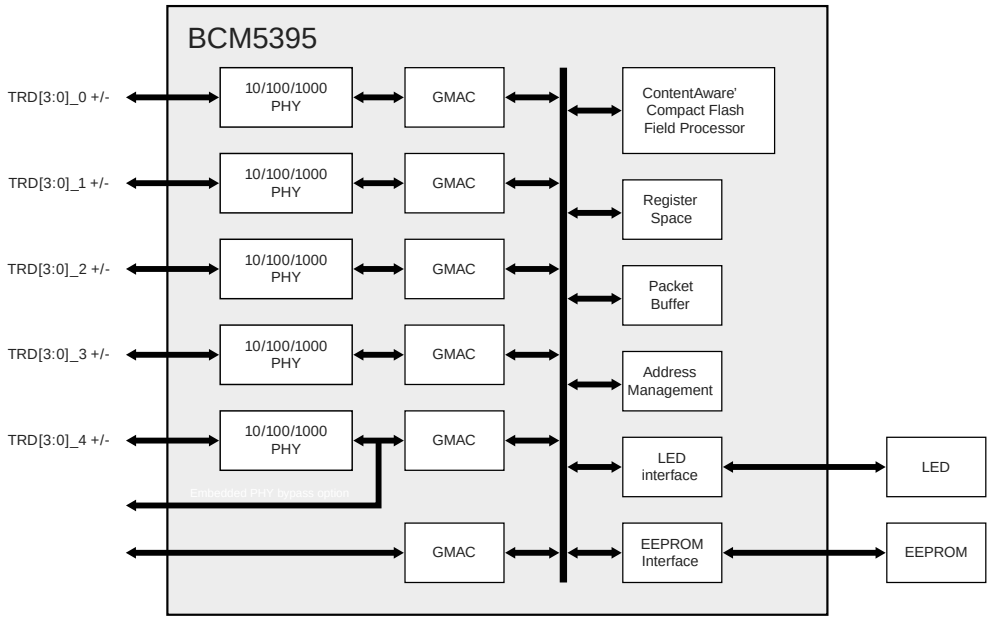

BCM5395 Block Diagram

The BCM5395 is a highly integrated, cost-effective Gigabit switch. The BCM5395 combines all the functions of a high-speed switch system, including five full-duplex 10/100/1000 BASE-T/TX Ethernet transceivers, packet buffer, Media Access Controllers (MACs), and a non-blocking switch fabric into a single 0.18µ CMOS device. In addition, the BCM5395 has one GMII/RGMII/MII/RvMII interface for a CPU or a wireless/DSL/cable router chip. It complies with the IEEE 802.3™ and IEEE 802.3x specifications, including the MAC control pause frame, providing compatibility with all industry-standard Ethernet, fast Ethernet, and Gigabit Ethernet devices.

The BCM5395 is packed with features, including VLAN, VLAN double tagging, per port QoS, jumbo frame, rate control, and MIBs management. Most importantly, it includes two Broadcom patented technologies, LoopDTech and CableChecker, that are designed to troubleshoot cable problems and loops during installation. Unlike traditional TDR-based cable diagnostics, Broadcom CableChecker, can detect cable and connector problems without having to disconnect the cable from the other end. This means CableChecker can be running while the switch is passing packets. With Broadcom WebSuperSmart™, a web-based management interface, network support personnel can monitor and troubleshoot network problems remotely, which is very important in SMB environment where IT resources are scarce. LoopDTech and CableChecker, when set up correctly, actually detect problems automatically without any human intervention.

The BCM5395 can be smart-managed with Broadcom WebSuperSmart, which can be provided by Broadcom and customized for system vendors. Broadcom's turnkey solution approach (silicon chip, reference boards, and management software) greatly accelerates time-to-market for customers.

The BCM5395 has all the features needed to enable SMB in a box, which can be connected to voice, multimedia, and data devices all at once. With the support for per port QoS/queuing and rate control, different packet types can be identified and prioritized within the switch, and voice packets can be assigned with higher priority for outbound.

The Ethernet functionalities, QoS, LoopDTech, and CableChecker are all integrated in a compact silicon chip, and all of the features can be managed through Broadcom's SDK, which makes the BCM5395 the most powerful and the easiest to deploy Gigabit Ethernet switch on the market today.

Broadcom®, the pulse logo, Connecting everything®, LoopDTech™, CableChecker™, and WebSuperSmart™ are trademarks of Broadcom Corporation and/or its subsidiaries in the United States and certain other countries. All other trademarks mentioned are the property of their respective owners.

Connecting

BROADCOM®

BROADCOM CORPORATION
5300 California Avenue,
Irvine, California 92617

© 2009 by BROADCOM CORPORATION. All rights reserved.

5395-PB01-R 04/22/09

Phone: 949-926-5000
Fax: 949-926-5203
E-mail: info@broadcom.com
Web: www.broadcom.com