Class CC Fuseblocks
600 Volt, 30 Amps

BC
Series

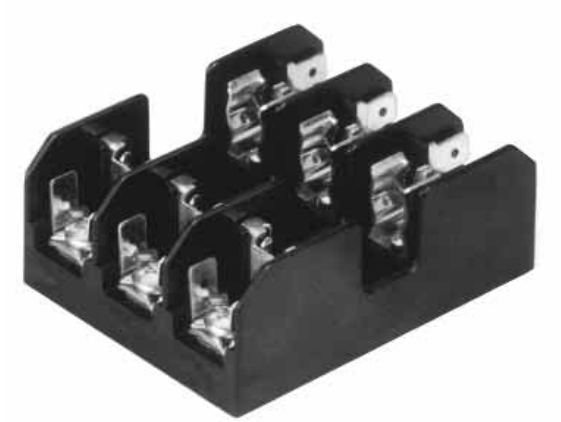

Catalog Symbol: BC Series

Class CC Fuseblocks

For use with Class CC Fuses (Bussmann LP-CC, KTK-R, and FRQ-R)

Ampere Rating: 1/10 to 30A

Voltage Rating: 600V

Withstand Rating: 200,000A RMS Sym.

Agency Information:

UL Listed, UL 512, Guide IZLT, File E14853

CSA Certified, C22.2 No. 39, Class 6225-01, File 47235

UL Flammability: 94VO

Materials: Base - Thermoplastic

Clips - Bright tin-plated bronze

DIN-RAIL Adapters: DRA-1 and DRA-2

Catalog Data

		Terminal Type				
Amps	Poles	Screw	Screw with Quick Connect*	Pressure Plate	Pressure Plate w/ Quick Connect*	Box Lug
1/10	1	BC6031S	BC6031SQ	BC6031P	BC6031PQ	BC6031B
to	2	BC6032S	BC6032SQ	BC6032P	BC6032PQ	BC6032B
30	3	BC6033S	BC6033SQ	BC6033P	BC6033PQ	BC6033B

Wire Range CU Only



#10-#14 #10-#14 #10-#14 #10-#14 #6-#14

* QUICK CONNECT RATED FOR 20A MAXIMUM.

CE CE logo denotes compliance with European Union Low Voltage Directive (50-1000 Vac, 75-1500 Vdc). Refer to Data Sheet: 8002 or contact Bussmann Application Engineering at 636-527-1270 for more information.

Dimensional Data

1 POLE

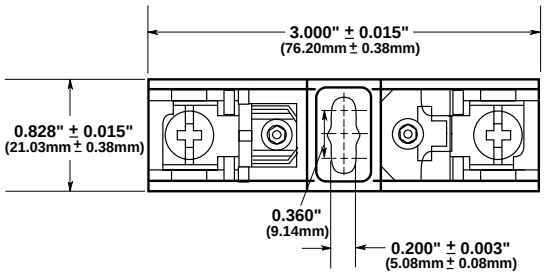

2 POLE

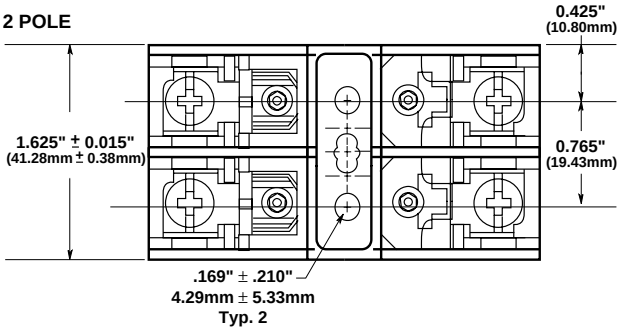

3 POLE

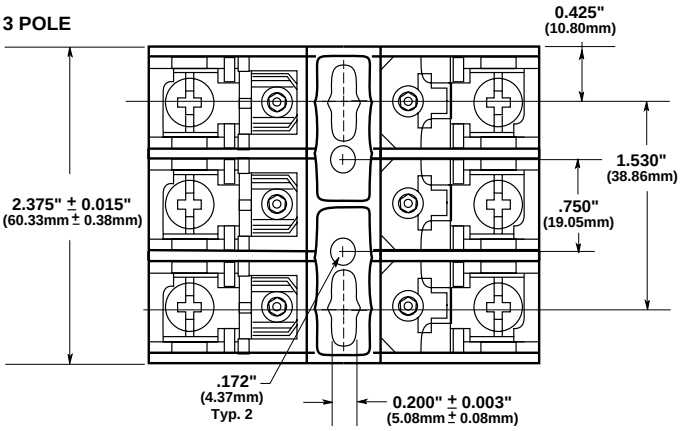

FUSEBLOCK LABEL (EXAMPLE SHOWN)

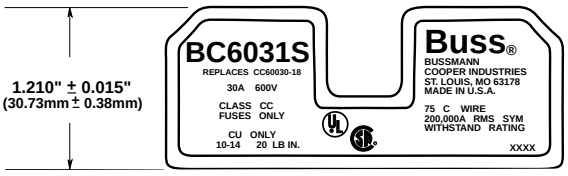

The only controlled copy of this Data Sheet is the electronic read-only version located on the Bussmann Network Drive. All other copies of this document are by definition uncontrolled. This bulletin is intended to clearly present comprehensive product data and provide technical information that will help the end user with design applications. Bussmann reserves the right, without notice, to change design or construction of any products and to discontinue or limit distribution of any products. Bussmann also reserves the right to change or update, without notice, any technical information contained in this bulletin. Once a product has been selected, it should be tested by the user in all possible applications.