ATCA-7150

AdvancedTCA Processor Blade

Embedded Computing for Business-Critical Continuity™

The ATCA-7150 blade is ideal for 32-bit or 64-bit applications requiring powerful processing performance and/or high memory capacity

- High performance processor blade with SMP support
- Two, dual-core Intel® Xeon® (2.13 GHz) LV processors
- Multiple software packages including operating system
- PICMG 3.0 Gigabit Ethernet base interface support
- PICMG 3.1, Option 1 fabric interface support
- Two SAS hard drive or SATA solid state disk bays for on-board storage and RAID 0/1 support
- Designed for NEBS and ETSI compliance

The Emerson Network Power ATCA-7150 is a fourth generation Intel® based processing blade that delivers a combination of performance and flexibility to help drive the successful implementation of next-generation telecom networks. It builds on the AdvancedTCA® (ATCA®) standard to provide the right product at the right time to meet the needs of the telecom industry.

The ATCA-7150 blade is RoHS (5 of 6) compliant, eliminating the need for customers to incur the time, resource and expense associated with creating and/or converting existing product to meet this international requirement.

With two dual-core Intel® Xeon® processors, the ATCA-7150 processor blade is the highest performance processing blade in an ATCA form factor. It also provides Gigabit Ethernet (GbE) interfaces to the PICMG® 3.0 base interface and the PICMG 3.1 fabric interface in a dual star configuration. Several other network configurations are also available.

An array of main memory options, and two local mass storage options add to the performance and flexibility of the ATCA-7150 processor blade.

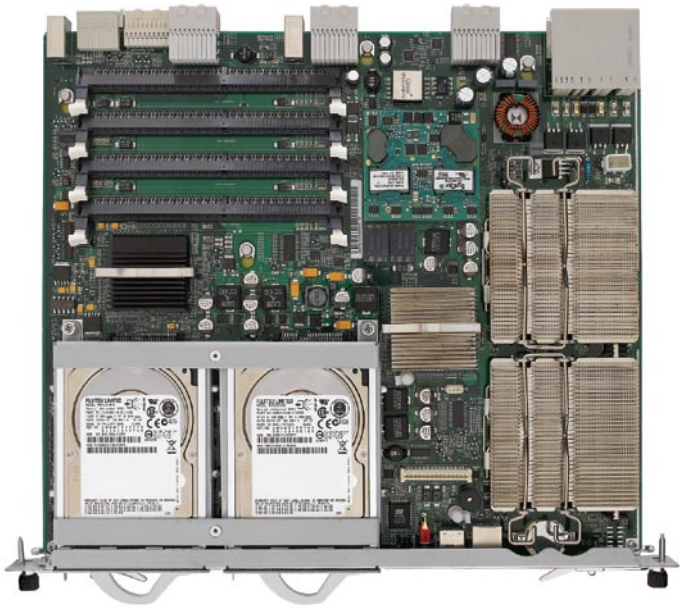

RoHS 5/6 Pb SOLDER EXEMPT

AdvancedTCA®

EMERSON™ Network Power

ATCA-7150 Block Diagram

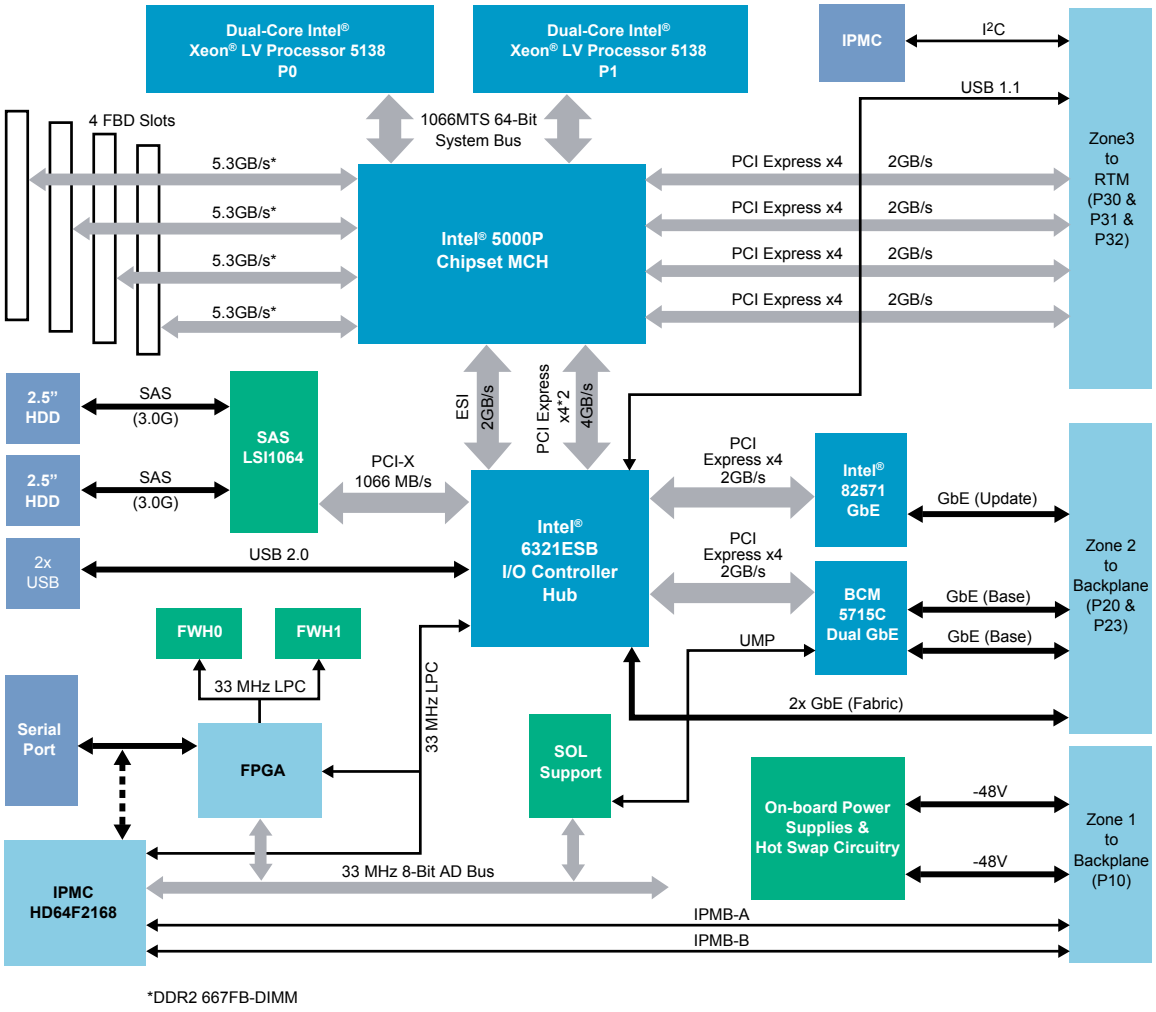

*DDR2 667FB-DIMM

Standard Networking Support

The ATCA-7150 processor blade provides PICMG 3.0 base interface connectivity in a dual star configuration using standard Gigabit Ethernet technology. The PICMG 3.1 fabric interface is also supported.

- PICMG 3.1, option 1 (redundant, 1.0Gbps)

Processor Complex

Surrounding the dual-core processors is an array of high performance components that combine to form a powerful processor complex. Features include:

- Intel® 5000 memory controller
- Intel® 6321ESB I/O controller
- Intel® 82571EB Gigabit Ethernet controllers
- Broadcom BCM 5715C Gigabit Ethernet controller
- LSI Logic LSI1064 SAS controller

Software Support

The ATCA-7150 blade can be configured with a variety of software offerings, from firmware-only to fully integrated and verified software operating environments.

Firmware-only blade-level support is offered for customers taking on the integration and verification responsibilities. It provides all the boot and IPMC firmware required for an ATCA blade.

SUPPORTED OPERATING SYSTEMS

- Red Hat RHEL 5.0 and 5.1
- MontaVista CGE 5.0

RELEVANT STANDARDS

- Linux Foundation

Intelligent Platform Management Control

The ATCA-7150 uses the Renesas HD64F2168 processor, as the intelligent platform management controller (IPMC). The IPMC is a management subsystem providing monitoring, event logging, and recovery control. The IPMC serves as the gateway for management applications to access the platform hardware. *Features include:*

- Compliance with PICMG 3.0
- Rollback capability if an operational BIOS image upgrade failed
- Upgradeable from IPMI interface (IPMB)
- Support for serial port redirection over LAN interface

Rear Transition Modules

An optional RTM is available for external Gigabit Ethernet connectivity. Interfaces include:

- Up to eight (8) Gigabit Ethernet interfaces (optional)
- One (1) monitor interface
- One (1) USB management interface
- Up to four (4) Fibre Channel interfaces 2Gbps (optional)

Hardware

PROCESSOR

- Two dual-core Intel® Xeon® LV 5138 (2.13 GHz)
- Frontside bus – 1,066 MT/s
- 4MB L2 cache (per processor)
- 64-bit mode extension (EM64T)
- SMP support

MEMORY

- Intel® 5000P memory controller
- 2, 4, 8 and 16GB memory configurations supported
- 1.0MB primary boot flash, dual bank architecture

COUNTERS/TIMERS

- Real-time clock
- Programmable watchdog timer

BASE AND FABRIC INTERFACES

- Dual star configuration
- PICMG 3.0 base interface compliant, Gigabit Ethernet (1.0Gbps)
- PICMG 3.1 fabric interface compliant, Gigabit Ethernet
  - PICMG 3.1, Option 1 – Single, redundant Gigabit Ethernet pair (1.0Gbps)

EXTERNAL INTERFACES

- Front panel
  - Serial, RJ-45 (1)
  - USB (2)
- Rear transition module
  - USB 1.1 (1)
  - Monitor interface (1)
  - Gigabit Ethernet interfaces (2, 4, 6 or 8), optional
  - Fibre Channel interfaces (2 or 4), optional

POWER REQUIREMENTS

- Dual-redundant –48V rail
- Input range: 39.5 – 72 VDC
- Power consumption: 140 – 160 W typical, 180 W max.

THERMAL CHARACTERISTICS

- Operating range: –5° C to 55° C

RELEVANT BLADE SIZE

- 8U form factor, 280 mm X 322.5 mm, single slot

RELEVANT STANDARDS

- PICMG 3.0 (form factor, IPMI, base interface, hot swap, RTM)
- PICMG 3.1, Option 1

Ordering Information

Part Number	Description
ATCA-7150-0GB	ATCA processor blade, two dual-core Intel® Xeon® LV processor (2.13 GHz), 0GB, 1G support, two HDD/SSD slots (RoHS 5/6)
ATCA-7X50-MEM-2G	2GB FBD memory module for the ATCA-7X50 (RoHS 6/6)
ATCA-7X50-MEM-4G	4GB FBD memory module for the ATCA-7X50 (RoHS 6/6)
ATCA7X50-HDD1-SAS	72GB SAS HDD for the ATCA-7X50 (RoHS 6/6) *See Note 1*
ATCA7X50-HDD2-SAS	146GB SAS HDD for the ATCA-7X50 (RoHS 6/6) *See Note 1*
ATCA7X50-HDD3-SATA	80GB SATA HDD (Ext. temp.) for the ATCA-7X50 (RoHS 6/6)
RTM-ATCA-7150-GE	RTM for the ATCA-7150 blade with two Gigabit Ethernet interfaces (RoHS 5/6)
RTM-ATCA-7150-GE-FC	RTM for the ATCA-7150 blade with two Gigabit Ethernet interfaces and two Fiber Channel interfaces (RoHS 5/6)
MEZC-RTM-7150-GE	Mezzanine card with 2 Gigabit Ethernet interfaces (ROHS 5/6) *See Note 2*
MEZC-RTM-7150-FC	Mezzanine card with 2 Fiber Channel interfaces (ROHS 5/6) *See Note 2*

Note 1: Limited temperature range if used with enterprise class SAS hard disks
Note 2: Add-ons to the RTM to add Gigabit Ethernet or Fiber Channel interfaces

Regulatory Compliance

Item	Description
Designed to comply with NEBS	GR-63-CORE, NEBS Physical Protection, Level 3
	GR-1089-CORE, Electromagnetic Compatibility and Electrical Safety — Generic Criteria for Network Telecommunications Equipment. Level 3, Equipment Type 2
Designed to comply with ETSI	ETSI Storage, ETS 300 019-2-1, Class 1.2 equipment, Not Temperature Controlled Storage Locations
	ETSI Transportation, ETS 300 019-2-2, Class 2.3 equipment, Public Transportation
	ETSI Operation, ETS 300 019-2-3, Class 3.2 equipment, Partly Temperature Controlled Locations
Designed to comply with Acoustic	ETS-300-753, Equipment Engineering (EE); Acoustic noise emitted by telecommunications equipment
EMC	EN-300-386 Electromagnetic compatibility and Radio spectrum Matters (ERM); telecommunication network equipment; ElectroMagnetic Compatibility (EMC) requirements, Telecommunication equipment room (attended)
	FCC 47 CFR Part 15 Subpart B (US), Class A
	EMC Directive 89/336/EEC (EU)
	AS/NZS 3548 (Australia/New Zealand), Limits and Methods of Measurement of Radio Disturbance Characteristics of Information Technology Equipment
	VCCI Class A (Japan), Voluntary Control Council for Interference by Information Technology Equipment
Safety	Compliance to UL/CSA 60950-1, EN 60950-1 and IEC 60950-1 CB Scheme. Marked with U.S. NRTL, Canadian Safety and CE Mark.
	Safety of information technology equipment, including electrical business equipment
	ETS 300-132-2 Environmental Engineering (EE); Power supply interface at the input to telecommunications equipment; Part 2: Operated by direct current (dc)
RoHS/WEEE compliance	DIRECTIVE 2002/95/EC OF THE EUROPEAN PARLIAMENT AND OF THE COUNCIL on the restriction of the use of certain hazardous substances in electrical and electronic equipment (RoHS)
	DIRECTIVE 2002/96/EC OF THE EUROPEAN PARLIAMENT AND OF THE COUNCIL on waste electrical and electronic equipment (WEEE)

SOLUTION SERVICES

Emerson Network Power provides a portfolio of solution services optimized to meet your needs throughout the product lifecycle. Design services help speed time-to-market. Deployment services include global 24x7 technical support. Renewal services enable product longevity and technology refresh.

PICMG, AdvancedTCA and the AdvancedTCA logo are registered trademarks and AdvancedMC is a trademark of PICMG. Service Availability is a proprietary trademark used under license. Intel and Xeon are registered trademarks of Intel Corporation or its subsidiaries in the U.S. and other countries. All other product or service names are the property of their respective owners.

This document identifies products, their specifications, and their characteristics, which may be suitable for certain applications. It does not constitute an offer to sell or a commitment of present or future availability, and should not be relied upon to state the terms and conditions, including warranties and disclaimers thereof, on which Emerson Network Power may sell products. A prospective buyer should exercise its own independent judgment to confirm the suitability of the products for particular applications. Emerson Network Power reserves the right to make changes, without notice, to any products or information herein which will, in its sole discretion, improve reliability, function, or design. Emerson Network Power does not assume any liability arising out of the application or use of any product or circuit described herein; neither does it convey any license under its patent or other intellectual property rights or under others. This disclaimer extends to any prospective buyer, and it includes Emerson Network Power's licensee, licensee's transferees, and licensee's customers and users. Availability of some of the products and services described herein may be restricted in some locations.

Emerson Network Power.
The global leader in enabling *Business-Critical Continuity™*.

- AC Power
- Connectivity
- DC Power
- **Embedded Computing**
- Embedded Power
- Infrastructure Management & Monitoring
- Outside Plant
- Power Switching & Controls
- Precision Cooling
- Racks & Integrated Cabinets
- Services
- Surge Protection

Emerson Network Power

Offices: Tempe, AZ U.S.A. 1 800 759 1107 or +1 602 438 5720 • Madison, WI U.S.A. 1 800 356 9602 or +1 608 831 5500
Paris, France +33 1 60 92 31 20 • Munich, Germany +49 89 9608 2333 • Tel Aviv, Israel +972 9 9560361
Hong Kong +852 2176 3540 • Shanghai, China +8610 8563 1122 • Tokyo, Japan +81 3 5403 2730 • Seoul, Korea +82 2 3483 1500

EmersonNetworkPower.com/EmbeddedComputing

Emerson, Business-Critical Continuity and Emerson Network Power are trademarks of Emerson Electric Co. or one of its affiliated companies. ©2009 Emerson Electric Co.

ATCA7150-D6 04/09