Screw-Cover Type 1 Pull Boxes and Accessories

Screw-Cover, Type 1



Application

Use this enclosure in commercial and general industrial applications that require a junction or pull box. For flush installations, order flush covers and door frames separately.

Features

- Unique keyhole screw slots in the cover
- Available with or without knockouts. Various sizes of easy-to-remove concentric knockouts on all four sides of standard boxes with knockouts.
- Optional flush-mounted door frame available
- Optional flush covers
- Flat, removable covers fastened with plated steel screws
- Provision for grounding
- Mounting holes on back of box

Specifications

- 16, 14 or 12 gauge steel or plated steel

Finish

ANSI 61 gray polyester powder paint finish inside and out. Unless otherwise specified, all custom pull boxes are finished with ANSI 61 gray polyester powder paint.

Industry Standards

UL 50, 50E Listed; Type 1; File No. E27525
cUL Listed per CSA C22.2 No 40; Type 1; File No. E27525

NEMA/EEMAC Type 1
IEC 60529, IP30

Accessories

See also Accessories.
Flush Covers
Flush-Mount Door Frames
Grounding Device
Type 1 Locking Window Pull Box Accessory
Touch-Up Paint

Bulletin: A90P1

Standard Product **Screw-Cover Type 1 Pull Boxes with Knockouts**

Catalog Number	AxBxC in.	AxBxC mm	Style	Number of Cover Screws	Knockout Pattern Along "A" Sides	Knockout Pattern Along "B" Sides
ASE4X4X3	4.00 x 4.00 x 3.00	102 x 102 x 76	Painted	2	B-C	B-C
ASG4X4X3	4.00 x 4.00 x 3.00	102 x 102 x 76	Galvanized	2	B-C	B-C
ASE6X6X3	6.00 x 6.00 x 3.00	152 x 152 x 76	Painted	2	B-C-D	B-C-D
ASG6X6X3	6.00 x 6.00 x 3.00	152 x 152 x 76	Galvanized	2	B-C-D	B-C-D
ASE8X6X3	8.00 x 6.00 x 3.00	203 x 152 x 76	Painted	2	F-G-H-I	B-C-D
ASG8X6X3	8.00 x 6.00 x 3.00	203 x 152 x 76	Galvanized	2	F-G-H-I	B-C-D
ASE16X14X3	16.00 x 14.00 x 3.00	406 x 356 x 76	Painted	4	B-C-D-E-F-G-H	B-C-D-E-F-G-H
ASE18X14X3	18.00 x 14.00 x 3.00	457 x 356 x 76	Painted	4	A-B-C-D-E-F-G-H-I	B-C-D-E-F-G-H
ASE4X4X4	4.00 x 4.00 x 4.00	102 x 102 x 102	Painted	2	B-C	B-C
ASG4X4X4	4.00 x 4.00 x 4.00	102 x 102 x 102	Galvanized	2	B-C	B-C
ASE6X4X4	6.00 x 4.00 x 4.00	152 x 102 x 102	Painted	2	B-C-D	B-C
ASG6X4X4	6.00 x 4.00 x 4.00	152 x 102 x 102	Galvanized	2	B-C-D	B-C
ASE6X6X4	6.00 x 6.00 x 4.00	152 x 152 x 102	Painted	2	B-C-D	B-C-D
ASG6X6X4	6.00 x 6.00 x 4.00	152 x 152 x 102	Galvanized	2	B-C-D	B-C-D
ASE8X6X4	8.00 x 6.00 x 4.00	203 x 152 x 102	Painted	2	F-G-H-I	B-C-D
ASG8X6X4	8.00 x 6.00 x 4.00	203 x 152 x 102	Galvanized	2	F-G-H-I	B-C-D
ASE8X8X4	8.00 x 8.00 x 4.00	203 x 203 x 102	Painted	4	F-G-H-I	F-G-H-I
ASG8X8X4	8.00 x 8.00 x 4.00	203 x 203 x 102	Galvanized	4	F-G-H-I	F-G-H-I
ASE10X8X4	10.00 x 8.00 x 4.00	254 x 203 x 102	Painted	4	F-G-H-I	F-G-H-I
ASG10X8X4	10.00 x 8.00 x 4.00	254 x 203 x 102	Galvanized	4	F-G-H-I	F-G-H-I
ASE10X10X4	10.00 x 10.00 x 4.00	254 x 254 x 102	Painted	4	F-G-H-I	C-D-E-F-G
ASG10X10X4	10.00 x 10.00 x 4.00	254 x 254 x 102	Galvanized	4	F-G-H-I	C-D-E-F-G
ASE12X8X4	12.00 x 8.00 x 4.00	305 x 203 x 102	Painted	4	C-D-E-F-G	F-G-H-I
ASG12X8X4	12.00 x 8.00 x 4.00	305 x 203 x 102	Galvanized	4	C-D-E-F-G	F-G-H-I
ASE12X10X4	12.00 x 10.00 x 4.00	305 x 254 x 102	Painted	4	C-D-E-F-G	C-D-E-F-G
ASG12X10X4	12.00 x 10.00 x 4.00	305 x 254 x 102	Galvanized	4	C-D-E-F-G	C-D-E-F-G
ASE12X12X4	12.00 x 12.00 x 4.00	305 x 305 x 102	Painted	4	C-D-E-F-G	C-D-E-F-G
ASG12X12X4	12.00 x 12.00 x 4.00	305 x 305 x 102	Galvanized	4	C-D-E-F-G	C-D-E-F-G
ASE16X12X4	16.00 x 12.00 x 4.00	406 x 305 x 102	Painted	4	B-C-D-E-F-G-H	C-D-E-F-G
ASG16X12X4	16.00 x 12.00 x 4.00	406 x 305 x 102	Galvanized	4	B-C-D-E-F-G-H	C-D-E-F-G
ASE18X12X4	18.00 x 12.00 x 4.00	457 x 305 x 102	Painted	4	A-B-C-D-E-F-G-H-I	C-D-E-F-G
ASG18X12X4	18.00 x 12.00 x 4.00	457 x 305 x 102	Galvanized	4	A-B-C-D-E-F-G-H-I	C-D-E-F-G
ASE18X18X4	18.00 x 18.00 x 4.00	457 x 457 x 102	Painted	4	A-B-C-D-E-F-G-H-I	A-B-C-D-E-F-G-H-I
ASG18X18X4	18.00 x 18.00 x 4.00	457 x 457 x 102	Galvanized	4	A-B-C-D-E-F-G-H-I	A-B-C-D-E-F-G-H-I
ASE24X12X4	24.00 x 12.00 x 4.00	610 x 305 x 102	Painted	4	A-B-C-D-E-F-G-H-I	C-D-E-F-G
ASE24X24X4	24.00 x 24.00 x 4.00	610 x 610 x 102	Painted	4	A-B-C-D-E-F-G-H-I	A-B-C-D-E-F-G-H-I
ASG24X24X4	24.00 x 24.00 x 4.00	610 x 610 x 102	Galvanized	4	A-B-C-D-E-F-G-H-I	A-B-C-D-E-F-G-H-I
ASE30X24X4	30.00 x 24.00 x 4.00	762 x 610 x 102	Painted	6	A-B-C-D-E-F-G-H-I	A-B-C-D-E-F-G-H-I
ASE6X6X6	6.00 x 6.00 x 6.00	152 x 152 x 152	Painted	2	B-C-D	B-C-D

© 2009 Hoffman Enclosures Inc.

Screw-Cover Type 1 Pull Boxes and Accessories

Catalog Number	AxBxC in.	AxBxC mm	Style	Number of Cover Screws	Knockout Pattern Along "A" Sides	Knockout Pattern Along "B" Sides
ASG6X6X6	6.00 x 6.00 x 6.00	152 x 152 x 152	Galvanized	2	B-C-D	B-C-D
ASE8X6X6	8.00 x 6.00 x 6.00	203 x 152 x 152	Painted	4	F-G-H-I	B-C-D
ASE8X8X6	8.00 x 8.00 x 6.00	203 x 203 x 152	Painted	4	F-G-H-I	F-G-H-I
ASG8X8X6	8.00 x 8.00 x 6.00	203 x 203 x 152	Galvanized	4	F-G-H-I	F-G-H-I
ASE10X8X6	10.00 x 8.00 x 6.00	254 x 203 x 152	Painted	4	F-G-H-I	F-G-H-I
ASG10X8X6	10.00 x 8.00 x 6.00	254 x 203 x 152	Galvanized	4	F-G-H-I	F-G-H-I
ASE10X10X6	10.00 x 10.00 x 6.00	254 x 254 x 152	Painted	4	F-G-H-I	C-D-E-F-G
ASG10X10X6	10.00 x 10.00 x 6.00	254 x 254 x 152	Galvanized	4	F-G-H-I	C-D-E-F-G
ASE12X10X6	12.00 x 10.00 x 6.00	305 x 254 x 152	Painted	4	C-D-E-F-G	C-D-E-F-G
ASG12X10X6	12.00 x 10.00 x 6.00	305 x 254 x 152	Galvanized	4	C-D-E-F-G	C-D-E-F-G
ASE12X12X6	12.00 x 12.00 x 6.00	305 x 305 x 152	Painted	4	C-D-E-F-G	C-D-E-F-G
ASG12X12X6	12.00 x 12.00 x 6.00	305 x 305 x 152	Galvanized	4	C-D-E-F-G	C-D-E-F-G
ASE16X12X6	16.00 x 12.00 x 6.00	406 x 305 x 152	Painted	4	B-C-D-E-F-G-H	C-D-E-F-G
ASG16X12X6	16.00 x 12.00 x 6.00	406 x 305 x 152	Galvanized	4	B-C-D-E-F-G-H	C-D-E-F-G
ASE16X16X6	16.00 x 16.00 x 6.00	406 x 406 x 152	Painted	4	B-C-D-E-F-G-H	B-C-D-E-F-G-H
ASG16X16X6	16.00 x 16.00 x 6.00	406 x 406 x 152	Galvanized	4	B-C-D-E-F-G-H	B-C-D-E-F-G-H
ASE18X12X6	18.00 x 12.00 x 6.00	457 x 305 x 152	Painted	4	A-B-C-D-E-F-G-H-I	C-D-E-F-G
ASG18X12X6	18.00 x 12.00 x 6.00	457 x 305 x 152	Galvanized	4	A-B-C-D-E-F-G-H-I	C-D-E-F-G
ASE18X18X6	18.00 x 18.00 x 6.00	457 x 457 x 152	Painted	4	A-B-C-D-E-F-G-H-I	A-B-C-D-E-F-G-H-I
ASG18X18X6	18.00 x 18.00 x 6.00	457 x 457 x 152	Galvanized	4	A-B-C-D-E-F-G-H-I	A-B-C-D-E-F-G-H-I
ASE24X18X6	24.00 x 18.00 x 6.00	610 x 457 x 152	Painted	4	A-B-C-D-E-F-G-H-I	A-B-C-D-E-F-G-H-I
ASG24X18X6	24.00 x 18.00 x 6.00	610 x 457 x 152	Galvanized	4	A-B-C-D-E-F-G-H-I	A-B-C-D-E-F-G-H-I
ASE24X24X6	24.00 x 24.00 x 6.00	610 x 610 x 152	Painted	4	A-B-C-D-E-F-G-H-I	A-B-C-D-E-F-G-H-I
ASG24X24X6	24.00 x 24.00 x 6.00	610 x 610 x 152	Galvanized	4	A-B-C-D-E-F-G-H-I	A-B-C-D-E-F-G-H-I
ASE30X24X6	30.00 x 24.00 x 6.00	762 x 610 x 152	Painted	6	A-B-C-D-E-F-G-H-I	A-B-C-D-E-F-G-H-I
ASG30X24X6	30.00 x 24.00 x 6.00	762 x 610 x 152	Galvanized	6	A-B-C-D-E-F-G-H-I	A-B-C-D-E-F-G-H-I
ASE36X24X6	36.00 x 24.00 x 6.00	914 x 610 x 152	Painted	6	A-B-C-D-E-F-G-H-I	A-B-C-D-E-F-G-H-I
ASG36X24X6	36.00 x 24.00 x 6.00	914 x 610 x 152	Galvanized	6	A-B-C-D-E-F-G-H-I	A-B-C-D-E-F-G-H-I
ASE8X8X8	8.00 x 8.00 x 8.00	203 x 203 x 203	Painted	4	F-G-H-I	F-G-H-I
ASE12X12X8	12.00 x 12.00 x 8.00	305 x 305 x 203	Painted	4	C-D-E-F-G	C-D-E-F-G
ASG12X12X8	12.00 x 12.00 x 8.00	305 x 305 x 203	Galvanized	4	C-D-E-F-G	C-D-E-F-G
ASE16X12X8	16.00 x 12.00 x 8.00	406 x 305 x 203	Painted	4	B-C-D-E-F-G-H	C-D-E-F-G
ASE18X12X8	18.00 x 12.00 x 8.00	457 x 305 x 203	Painted	4	A-B-C-D-E-F-G-H-I	C-D-E-F-G
ASE24X12X8	24.00 x 12.00 x 8.00	610 x 305 x 203	Painted	4	A-B-C-D-E-F-G-H-I	C-D-E-F-G
ASE24X18X8	24.00 x 18.00 x 8.00	610 x 457 x 203	Painted	4	A-B-C-D-E-F-G-H-I	A-B-C-D-E-F-G-H-I
ASE24X24X8	24.00 x 24.00 x 8.00	610 x 610 x 203	Painted	4	A-B-C-D-E-F-G-H-I	A-B-C-D-E-F-G-H-I
ASE36X24X8	36.00 x 24.00 x 8.00	914 x 610 x 203	Painted	6	A-B-C-D-E-F-G-H-I	A-B-C-D-E-F-G-H-I
ASE18X12X10	18.00 x 12.00 x 10.00	457 x 305 x 254	Painted	4	A-B-C-D-E-F-G-H-I	C-D-E-F-G
ASE18X18X10	18.00 x 18.00 x 10.00	457 x 457 x 254	Painted	4	A-B-C-D-E-F-G-H-I	A-B-C-D-E-F-G-H-I
ASE24X18X10	24.00 x 18.00 x 10.00	610 x 457 x 254	Painted	4	A-B-C-D-E-F-G-H-I	A-B-C-D-E-F-G-H-I
ASE24X24X10	24.00 x 24.00 x 10.00	610 x 610 x 254	Painted	4	A-B-C-D-E-F-G-H-I	A-B-C-D-E-F-G-H-I
ASE36X24X10	36.00 x 24.00 x 10.00	914 x 610 x 254	Painted	6	A-B-C-D-E-F-G-H-I	A-B-C-D-E-F-G-H-I
ASE24X12X12	24.00 x 12.00 x 12.00	610 x 305 x 305	Painted	4	A-B-C-D-E-F-G-H-I	C-D-E-F-G
ASE18X18X12	18.00 x 18.00 x 12.00	457 x 457 x 305	Painted	4	A-B-C-D-E-F-G-H-I	A-B-C-D-E-F-G-H-I
ASE24X18X12	24.00 x 18.00 x 12.00	610 x 457 x 305	Painted	4	A-B-C-D-E-F-G-H-I	A-B-C-D-E-F-G-H-I
ASE24X24X12	24.00 x 24.00 x 12.00	610 x 610 x 305	Painted	4	A-B-C-D-E-F-G-H-I	A-B-C-D-E-F-G-H-I
ASE30X24X12	30.00 x 24.00 x 12.00	762 x 610 x 305	Painted	6	A-B-C-D-E-F-G-H-I	A-B-C-D-E-F-G-H-I
ASE36X24X12	36.00 x 24.00 x 12.00	914 x 610 x 305	Painted	6	A-B-C-D-E-F-G-H-I	A-B-C-D-E-F-G-H-I

Standard Product **Screw-Cover Type 1 Pull Boxes without Knockouts**

Catalog Number	AxBxC in.	AxBxC mm	Style	Number of Cover Screws
ASE4X4X3NK	4.00 x 4.00 x 3.00	102 x 102 x 76	Painted	2
ASG4X4X3NK	4.00 x 4.00 x 3.00	102 x 102 x 76	Galvanized	2
ASE6X6X3NK	6.00 x 6.00 x 3.00	152 x 152 x 76	Painted	2
ASG6X6X3NK	6.00 x 6.00 x 3.00	152 x 152 x 76	Galvanized	2
ASE8X6X3NK	8.00 x 6.00 x 3.00	203 x 152 x 76	Painted	2
ASG8X6X3NK	8.00 x 6.00 x 3.00	203 x 152 x 76	Galvanized	2
ASE16X14X3NK	16.00 x 14.00 x 3.00	406 x 356 x 76	Painted	4
ASE20X14X3NK	20.00 x 14.00 x 3.00	508 x 356 x 76	Painted	4
ASE4X4X4NK	4.00 x 4.00 x 4.00	102 x 102 x 102	Painted	2
ASG4X4X4NK	4.00 x 4.00 x 4.00	102 x 102 x 102	Galvanized	2
ASE6X4X4NK	6.00 x 4.00 x 4.00	152 x 102 x 102	Painted	2
ASG6X4X4NK	6.00 x 4.00 x 4.00	152 x 102 x 102	Galvanized	2
ASE6X6X4NK	6.00 x 6.00 x 4.00	152 x 152 x 102	Painted	2
ASG6X6X4NK	6.00 x 6.00 x 4.00	152 x 152 x 102	Galvanized	2
ASE8X6X4NK	8.00 x 6.00 x 4.00	203 x 152 x 102	Painted	2
ASG8X6X4NK	8.00 x 6.00 x 4.00	203 x 152 x 102	Galvanized	2
ASE8X8X4NK	8.00 x 8.00 x 4.00	203 x 203 x 102	Painted	4
ASG8X8X4NK	8.00 x 8.00 x 4.00	203 x 203 x 102	Galvanized	4
ASE10X6X4NK	10.00 x 6.00 x 4.00	254 x 152 x 102	Painted	4
ASG10X6X4NK	10.00 x 6.00 x 4.00	254 x 152 x 102	Galvanized	4
ASE10X8X4NK	10.00 x 8.00 x 4.00	254 x 203 x 102	Painted	4
ASG10X8X4NK	10.00 x 8.00 x 4.00	254 x 203 x 102	Galvanized	4
ASE10X10X4NK	10.00 x 10.00 x 4.00	254 x 254 x 102	Painted	4
ASG10X10X4NK	10.00 x 10.00 x 4.00	254 x 254 x 102	Galvanized	4
ASE12X6X4NK	12.00 x 6.00 x 4.00	305 x 152 x 102	Painted	4
ASG12X6X4NK	12.00 x 6.00 x 4.00	305 x 152 x 102	Galvanized	4
ASE12X8X4NK	12.00 x 8.00 x 4.00	305 x 203 x 102	Painted	4

© 2009 Hoffman Enclosures Inc.

Screw-Cover Type 1 Pull Boxes and Accessories

Catalog Number	AxBxC in.	AxBxC mm	Style	Number of Cover Screws
ASG12X8X4NK	12.00 x 8.00 x 4.00	305 x 203 x 102	Galvanized	4
ASE12X10X4NK	12.00 x 10.00 x 4.00	305 x 254 x 102	Painted	4
ASG12X10X4NK	12.00 x 10.00 x 4.00	305 x 254 x 102	Galvanized	4
ASE12X12X4NK	12.00 x 12.00 x 4.00	305 x 305 x 102	Painted	4
ASG12X12X4NK	12.00 x 12.00 x 4.00	305 x 305 x 102	Galvanized	4
ASE15X15X4NK	15.00 x 15.00 x 4.00	381 x 381 x 102	Painted	4
ASG15X15X4NK	15.00 x 15.00 x 4.00	381 x 381 x 102	Galvanized	4
ASE16X12X4NK	16.00 x 12.00 x 4.00	406 x 305 x 102	Painted	4
ASG16X12X4NK	16.00 x 12.00 x 4.00	406 x 305 x 102	Galvanized	4
ASE18X12X4NK	18.00 x 12.00 x 4.00	457 x 305 x 102	Painted	4
ASG18X12X4NK	18.00 x 12.00 x 4.00	457 x 305 x 102	Galvanized	4
ASE18X15X4NK	18.00 x 15.00 x 4.00	457 x 381 x 102	Painted	4
ASE18X18X4NK	18.00 x 18.00 x 4.00	457 x 457 x 102	Painted	4
ASG18X18X4NK	18.00 x 18.00 x 4.00	457 x 457 x 102	Galvanized	4
ASE24X12X4NK	24.00 x 12.00 x 4.00	610 x 305 x 102	Painted	4
ASE24X18X4NK	24.00 x 18.00 x 4.00	610 x 457 x 102	Painted	4
ASG24X18X4NK	24.00 x 18.00 x 4.00	610 x 457 x 102	Galvanized	4
ASE24X24X4NK	24.00 x 24.00 x 4.00	610 x 610 x 102	Painted	4
ASG24X24X4NK	24.00 x 24.00 x 4.00	610 x 610 x 102	Galvanized	4
ASE30X24X4NK	30.00 x 24.00 x 4.00	762 x 610 x 102	Painted	6
ASE30X30X4NK	30.00 x 30.00 x 4.00	762 x 762 x 102	Painted	8
ASE6X6X6NK	6.00 x 6.00 x 6.00	152 x 152 x 152	Painted	2
ASG6X6X6NK	6.00 x 6.00 x 6.00	152 x 152 x 152	Galvanized	2
ASE8X6X6NK	8.00 x 6.00 x 6.00	203 x 152 x 152	Painted	2
ASG8X6X6NK	8.00 x 6.00 x 6.00	203 x 152 x 152	Galvanized	2
ASE8X8X6NK	8.00 x 8.00 x 6.00	203 x 203 x 152	Painted	4
ASG8X8X6NK	8.00 x 8.00 x 6.00	203 x 203 x 152	Galvanized	4
ASE10X8X6NK	10.00 x 8.00 x 6.00	254 x 203 x 152	Painted	4
ASG10X8X6NK	10.00 x 8.00 x 6.00	254 x 203 x 152	Galvanized	4
ASE10X10X6NK	10.00 x 10.00 x 6.00	254 x 254 x 152	Painted	4
ASG10X10X6NK	10.00 x 10.00 x 6.00	254 x 254 x 152	Galvanized	4
ASE12X6X6NK	12.00 x 6.00 x 6.00	305 x 152 x 152	Painted	4
ASE12X8X6NK	12.00 x 8.00 x 6.00	305 x 203 x 152	Painted	4
ASG12X8X6NK	12.00 x 8.00 x 6.00	305 x 203 x 152	Galvanized	4
ASE12X10X6NK	12.00 x 10.00 x 6.00	305 x 254 x 152	Painted	4
ASG12X10X6NK	12.00 x 10.00 x 6.00	305 x 254 x 152	Galvanized	4
ASE12X12X6NK	12.00 x 12.00 x 6.00	305 x 305 x 152	Painted	4
ASG12X12X6NK	12.00 x 12.00 x 6.00	305 x 305 x 152	Galvanized	4
ASE16X12X6NK	16.00 x 12.00 x 6.00	406 x 305 x 152	Painted	4
ASG16X12X6NK	16.00 x 12.00 x 6.00	406 x 305 x 152	Galvanized	4
ASE16X16X6NK	16.00 x 16.00 x 6.00	406 x 406 x 152	Painted	4
ASG16X16X6NK	16.00 x 16.00 x 6.00	406 x 406 x 152	Galvanized	4
ASE18X12X6NK	18.00 x 12.00 x 6.00	457 x 305 x 152	Painted	4
ASG18X12X6NK	18.00 x 12.00 x 6.00	457 x 305 x 152	Galvanized	4
ASE18X18X6NK	18.00 x 18.00 x 6.00	457 x 457 x 152	Painted	4
ASG18X18X6NK	18.00 x 18.00 x 6.00	457 x 457 x 152	Galvanized	4
ASE24X12X6NK	24.00 x 12.00 x 6.00	610 x 305 x 152	Painted	4
ASG24X12X6NK	24.00 x 12.00 x 6.00	610 x 305 x 152	Galvanized	4
ASE24X18X6NK	24.00 x 18.00 x 6.00	610 x 457 x 152	Painted	4
ASG24X18X6NK	24.00 x 18.00 x 6.00	610 x 457 x 152	Galvanized	4
ASE24X20X6NK	24.00 x 20.00 x 6.00	610 x 508 x 152	Painted	4
ASG24X20X6NK	24.00 x 20.00 x 6.00	610 x 508 x 152	Galvanized	4
ASE24X24X6NK	24.00 x 24.00 x 6.00	610 x 610 x 152	Painted	4
ASG24X24X6NK	24.00 x 24.00 x 6.00	610 x 610 x 152	Galvanized	4
ASE30X24X6NK	30.00 x 24.00 x 6.00	762 x 610 x 152	Painted	6
ASG30X24X6NK	30.00 x 24.00 x 6.00	762 x 610 x 152	Galvanized	6
ASE30X30X6NK	30.00 x 30.00 x 6.00	762 x 762 x 152	Painted	8
ASG30X30X6NK	30.00 x 30.00 x 6.00	762 x 762 x 152	Galvanized	8
ASE36X24X6NK	36.00 x 24.00 x 6.00	914 x 610 x 152	Painted	6
ASG36X24X6NK	36.00 x 24.00 x 6.00	914 x 610 x 152	Galvanized	6
ASE36X30X6NK	36.00 x 30.00 x 6.00	914 x 762 x 152	Painted	8
ASE36X36X6NK	36.00 x 36.00 x 6.00	914 x 914 x 152	Painted	8
ASG36X36X6NK	36.00 x 36.00 x 6.00	914 x 914 x 152	Galvanized	8
ASE8X8X8NK	8.00 x 8.00 x 8.00	203 x 203 x 203	Painted	4
ASG8X8X8NK	8.00 x 8.00 x 8.00	203 x 203 x 203	Galvanized	4
ASE10X10X8NK	10.00 x 10.00 x 8.00	254 x 254 x 203	Painted	4
ASG10X10X8NK	10.00 x 10.00 x 8.00	254 x 254 x 203	Galvanized	4
ASE12X10X8NK	12.00 x 10.00 x 8.00	305 x 254 x 203	Painted	4
ASE12X12X8NK	12.00 x 12.00 x 8.00	305 x 305 x 203	Painted	4
ASG12X12X8NK	12.00 x 12.00 x 8.00	305 x 305 x 203	Galvanized	4
ASE16X12X8NK	16.00 x 12.00 x 8.00	406 x 305 x 203	Painted	4
ASE18X12X8NK	18.00 x 12.00 x 8.00	457 x 305 x 203	Painted	4
ASG18X12X8NK	18.00 x 12.00 x 8.00	457 x 305 x 203	Galvanized	4
ASE18X18X8NK	18.00 x 18.00 x 8.00	457 x 457 x 203	Painted	4
ASG18X18X8NK	18.00 x 18.00 x 8.00	457 x 457 x 203	Galvanized	4
ASE24X12X8NK	24.00 x 12.00 x 8.00	610 x 305 x 203	Painted	4
ASG24X12X8NK	24.00 x 12.00 x 8.00	610 x 305 x 203	Galvanized	4
ASE24X18X8NK	24.00 x 18.00 x 8.00	610 x 457 x 203	Painted	4
ASG24X18X8NK	24.00 x 18.00 x 8.00	610 x 457 x 203	Galvanized	4
ASE24X20X8NK	24.00 x 20.00 x 8.00	610 x 508 x 203	Painted	4

© 2009 Hoffman Enclosures Inc.

Screw-Cover Type 1 Pull Boxes and Accessories

Catalog Number	AxBxC in.	AxBxC mm	Style	Number of Cover Screws
ASG24X20X8NK	24.00 x 20.00 x 8.00	610 x 508 x 203	Galvanized	4
ASE24X24X8NK	24.00 x 24.00 x 8.00	610 x 610 x 203	Painted	4
ASG24X24X8NK	24.00 x 24.00 x 8.00	610 x 610 x 203	Galvanized	4
ASE30X24X8NK	30.00 x 24.00 x 8.00	762 x 610 x 203	Painted	6
ASG30X24X8NK	30.00 x 24.00 x 8.00	762 x 610 x 203	Galvanized	6
ASE30X30X8NK	30.00 x 30.00 x 8.00	762 x 762 x 203	Painted	8
ASG30X30X8NK	30.00 x 30.00 x 8.00	762 x 762 x 203	Galvanized	8
ASE36X24X8NK	36.00 x 24.00 x 8.00	914 x 610 x 203	Painted	6
ASG36X24X8NK	36.00 x 24.00 x 8.00	914 x 610 x 203	Galvanized	6
ASE36X36X8NK	36.00 x 36.00 x 8.00	914 x 914 x 203	Painted	8
ASG36X36X8NK	36.00 x 36.00 x 8.00	914 x 914 x 203	Galvanized	8
ASE12X12X10NK	12.00 x 12.00 x 10.00	305 x 305 x 254	Painted	4
ASG12X12X10NK	12.00 x 12.00 x 10.00	305 x 305 x 254	Galvanized	4
ASE18X12X10NK	18.00 x 12.00 x 10.00	457 x 305 x 254	Painted	4
ASE18X18X10NK	18.00 x 18.00 x 10.00	457 x 457 x 254	Painted	4
ASG18X18X10NK	18.00 x 18.00 x 10.00	457 x 457 x 254	Galvanized	4
ASE24X12X10NK	24.00 x 12.00 x 10.00	610 x 305 x 254	Painted	4
ASE24X18X10NK	24.00 x 18.00 x 10.00	610 x 457 x 254	Painted	4
ASE24X24X10NK	24.00 x 24.00 x 10.00	610 x 610 x 254	Painted	4
ASG24X24X10NK	24.00 x 24.00 x 10.00	610 x 610 x 254	Galvanized	4
ASE30X24X10NK	30.00 x 24.00 x 10.00	762 x 610 x 254	Painted	6
ASE30X30X10NK	30.00 x 30.00 x 10.00	762 x 762 x 254	Painted	8
ASG30X30X10NK	30.00 x 30.00 x 10.00	762 x 762 x 254	Galvanized	8
ASE36X24X10NK	36.00 x 24.00 x 10.00	914 x 610 x 254	Painted	6
ASG36X24X10NK	36.00 x 24.00 x 10.00	914 x 610 x 254	Galvanized	6
ASE36X36X10NK	36.00 x 36.00 x 10.00	914 x 914 x 254	Painted	8
ASG36X36X10NK	36.00 x 36.00 x 10.00	914 x 914 x 254	Galvanized	8
ASE12X12X12NK	12.00 x 12.00 x 12.00	305 x 305 x 305	Painted	4
ASG12X12X12NK	12.00 x 12.00 x 12.00	305 x 305 x 305	Galvanized	4
ASE24X12X12NK	24.00 x 12.00 x 12.00	610 x 305 x 305	Painted	4
ASG24X12X12NK	24.00 x 12.00 x 12.00	610 x 305 x 305	Galvanized	4
ASE18X18X12NK	18.00 x 18.00 x 12.00	457 x 457 x 305	Painted	4
ASG18X18X12NK	18.00 x 18.00 x 12.00	457 x 457 x 305	Galvanized	4
ASE24X18X12NK	24.00 x 18.00 x 12.00	610 x 457 x 305	Painted	4
ASE24X24X12NK	24.00 x 24.00 x 12.00	610 x 610 x 305	Painted	4
ASG24X24X12NK	24.00 x 24.00 x 12.00	610 x 610 x 305	Galvanized	4
ASE30X24X12NK	30.00 x 24.00 x 12.00	762 x 610 x 305	Painted	6
ASE30X30X12NK	30.00 x 30.00 x 12.00	762 x 762 x 305	Painted	8
ASG30X30X12NK	30.00 x 30.00 x 12.00	762 x 762 x 305	Galvanized	8
ASE36X24X12NK	36.00 x 24.00 x 12.00	914 x 610 x 305	Painted	6
ASG36X24X12NK	36.00 x 24.00 x 12.00	914 x 610 x 305	Galvanized	6
ASE36X36X12NK	36.00 x 36.00 x 12.00	914 x 914 x 305	Painted	8
ASG36X36X12NK	36.00 x 36.00 x 12.00	914 x 914 x 305	Galvanized	8
ASE48X48X12NK	48.00 x 48.00 x 12.00	1219 x 1219 x 305	Painted	12
ASG48X48X12NK	48.00 x 48.00 x 12.00	1219 x 1219 x 305	Galvanized	12
ASE30X30X16NK	30.00 x 30.00 x 16.00	762 x 762 x 406	Painted	8
ASE36X36X16NK	36.00 x 36.00 x 16.00	914 x 914 x 406	Painted	8
ASG36X36X16NK	36.00 x 36.00 x 16.00	914 x 914 x 406	Galvanized	8
ASE48X48X16NK	48.00 x 48.00 x 16.00	1219 x 1219 x 406	Painted	12
ASG48X48X16NK	48.00 x 48.00 x 16.00	1219 x 1219 x 406	Galvanized	12

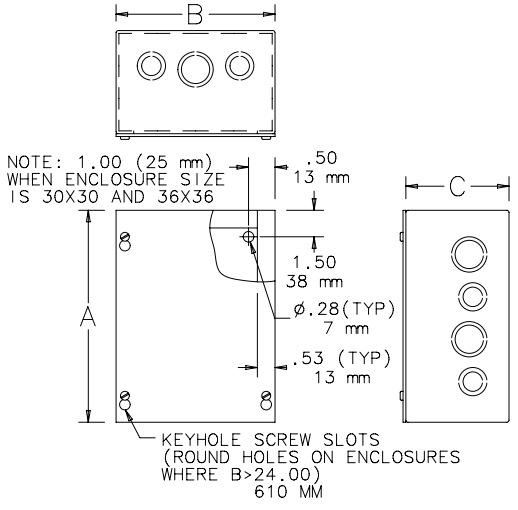

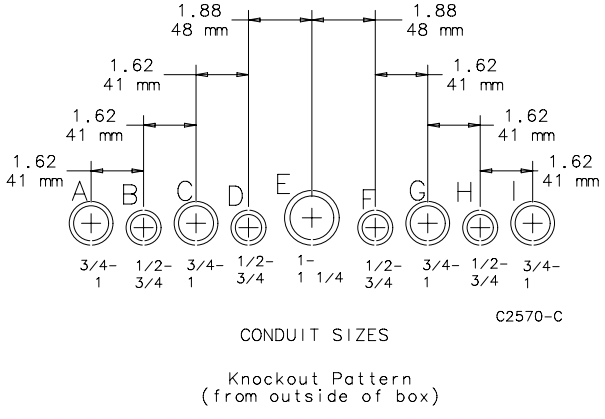

© 2009 Hoffman Enclosures Inc.

Screw-Cover Type 1 Pull Boxes and Accessories

Flush Covers



Designed to mount on enclosure for flush installations. Cover is 16 or 14 gauge steel finished with ANSI 61 gray polyester powder paint.

Bulletin: A90P1

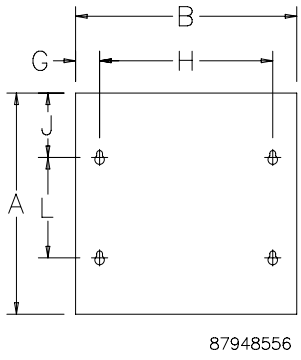

Standard Product

Catalog Number	AxB in./mm	Fits Box Size A x B in./mm	G in./mm	H in./mm	J in./mm	L in./mm	Cover Gauge
AFE6X6	7.50 x 7.50	6.00 x 6.00	1.03	5.44	3.75	—	16
	191 x 191	152 x 152	26	138	95	—	
AFE8X6	9.50 x 7.50	8.00 x 6.00	1.03	5.44	4.75	—	16
	241 x 191	203 x 152	26	138	121	—	
AFE8X8	9.50 x 9.50	8.00 x 8.00	1.03	7.44	2.77	4.31	16
	241 x 241	203 x 203	26	189	70	109	
AFE10X8	11.50 x 9.50	10.00 x 8.00	1.03	7.44	2.77	6.31	16
	292 x 241	254 x 203	26	189	70	160	
AFE10X10	11.50 x 11.50	10.00 x 10.00	1.03	9.44	2.77	6.31	16
	292 x 292	254 x 254	26	240	70	160	
AFE12X8	13.50 x 9.50	12.00 x 8.00	1.03	7.44	2.77	8.31	16
	343 x 241	305 x 203	26	189	70	211	
AFE12X12	13.50 x 13.50	12.00 x 12.00	1.03	11.44	2.77	8.31	16
	343 x 343	305 x 305	26	291	70	211	
AFE18X12	19.50 x 13.50	18.00 x 12.00	1.03	11.44	2.77	14.31	16
	495 x 343	457 x 305	26	291	70	363	
AFE18X18	19.50 x 19.50	18.00 x 18.00	1.03	17.44	2.77	14.31	16
	495 x 495	457 x 457	26	443	70	363	
AFE24X18	25.50 x 19.50	24.00 x 18.00	1.05	17.41	2.77	20.31	14
	648 x 495	610 x 457	27	442	70	516	
AFE24X24	25.50 x 25.50	24.00 x 24.00	1.05	23.41	2.77	20.31	14
	648 x 648	610 x 610	27	595	70	516	

© 2009 Hoffman Enclosures Inc.

Screw-Cover Type 1 Pull Boxes and Accessories

Flush-Mount Door Frames



Use in Screw-Cover Pull Box telephone cabinet installations or in communication wiring and signal systems. Also as a junction or pull box and switch enclosure.

- Continuous hinge
- Rugged black composite slide latch
- Optional tamper-resistant lock kit includes cylinder lock, tamper-resistant screws and special driver bit.
- Lock Kit: ACLFDF
- 14 gauge steel door frame has ANSI 61 gray polyester powder paint finish

Bulletin: A90P1

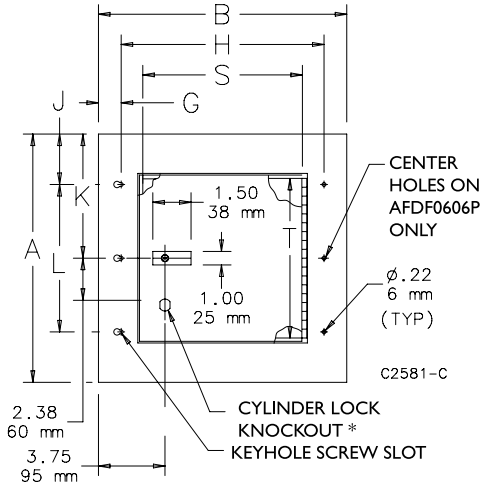

* Not available on AFDF0606P

Standard Product

Catalog Number	Frame Size A x B in./mm	Door Size T in./mm	Door Size S in./mm	Fits Box Size A x B in./mm	G in./mm	H in./mm	J in./mm	K in./mm	L in./mm
AFDF0606P	8.00 x 8.00	3.00	3.00	6.00 x 6.00	1.28	5.44	N/A	4.00	N/A
	203 x 203	76	76	152 x 152	32	138	N/A	102	N/A
AFDF1212P	14.00 x 14.00	9.00	9.00	12.00 x 12.00	1.28	11.44	2.84	7.00	8.31
	356 x 356	229	229	305 x 305	32	291	72	178	211
AFDF1812P	20.00 x 14.00	15.00	9.00	18.00 x 12.00	1.28	11.44	2.84	10.00	14.31
	508 x 356	381	229	457 x 305	32	291	72	254	364
AFDF1818P	20.00 x 20.00	15.00	15.00	18.00 x 18.00	1.28	17.44	2.84	10.00	14.31
	508 x 508	381	381	457 x 457	32	443	72	254	364
AFDF2418P	26.00 x 20.00	21.00	15.00	24.00 x 18.00	1.28	17.44	2.84	13.00	20.31
	660 x 508	533	381	610 x 457	32	443	72	330	516
AFDF2424P	26.00 x 26.00	21.00	21.00	24.00 x 24.00	1.30	23.41	2.84	13.00	20.31
	660 x 660	533	533	610 x 610	33	595	72	330	516
AFDF3024P	32.00 x 26.00	27.00	21.00	30.00 x 24.00	1.30	23.41	2.84	16.00	26.31
	813 x 660	686	533	762 x 610	33	595	72	406	668

© 2009 Hoffman Enclosures Inc.