FIBOX
Enclosing innovations

ARCA AR664CHSC



Sample photo

Order symbol:	AR664CHSC	**EAN:**	6418074066473
Product nbr:	8561006	**El. number:**	
Description:	PC Enclosure	Finland:	
Remarks:	Hinged opaque screw cover	:	
		Norway:	

Including: Hinged screw cover base with 10-32 brass inserts, cover with formed in place PUR gasket, stainless hinge pin and 2 cover screws. Enclosure mounting foot kit. Accessory 10-32 screws for panel mounting.

Dimensions:	Length	Width	Height
mm:	152	152	102
inch:	6.0	6.0	4.0

Materials:

Material:	Polycarbonate
Base colour:	RAL 7035
Cover colour:	RAL 7035
Cover screws material:	Stainless steel
Gasket material:	Polyurethane

Temperatures:

Short term:	-40 ... 140 °C
Continuous:	-40 ... 80 °C
Short term:	-40 ... 284 °F
Continuous:	-40 ... 175 °F

Accessories:

APBP66	PVC Back Panel
ABP66	Painted Steel Back Panel
ALBP66	Aluminum Back Panel
ADFP66	Dead Front Panel w/ screws
ASP66	Aluminum Swing Panel
ASPK66	Swing Panel Kit incl. Panel
ASPHK6	Swing Panel Kit w/o Panel
AMFL6	6" Mounting Flange Set

Rating:

Ingress Protection (EN 60529): IP 66/67
Impact Resistance (EN 62262): IK 08/07
Electrical insulation: Totally insulated
Halogen free (DIN/VDE 0472, Part 815): Yes
UV resistance: UL 508
Flammability Rating (UL 746 C 5): complies with UL 508
Glow Wire Test (IEC 695-2-1) °C: 960
NEMA Class: NEMA 4, 4X, 6, 6P, 12, 13

Certificates:

Underwriters Laboratories

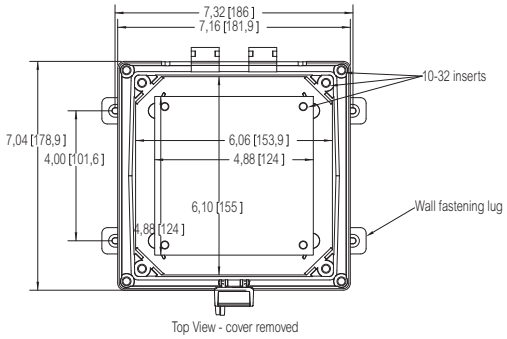

Top View - cover removed

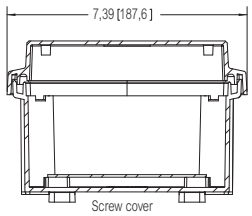

Screw cover

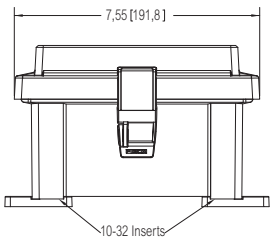

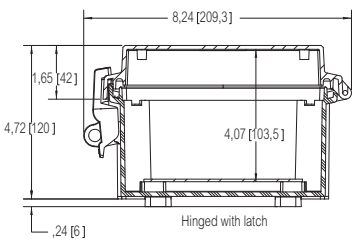

Hinged with latch

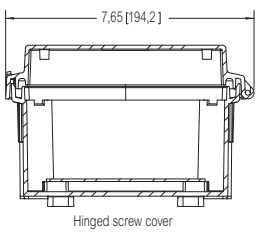

Hinged screw cover

© Fibox Oy, Data subject to change without notice (printed: 20.3.2013)