RoHS Compliant

CFast

Specification

Mar 15, 2011

Version 1.3

Apacer Technology Inc.
4th Fl.,75 Xintai 5th Rd., Sec.1, Hsichih, New Taipei City, Taiwan 221
Tel: +886-2-2698-2888 Fax: +886-2-2698-2889
www.apacer.com

Features:

- **Standard Serial ATA 2.6 (Gen. 2)**
  - SATA II, 3.0 Gbps
  - ATA-compatible command set
- **Connector type**
  - 7 + 17 pin female connector
- **Low power consumption**
  - Supply voltage: 3.3V
  - Active mode: 370 mA
  - Idle mode: 230 mA
- **Performance**
  - Sustained read: Up to 120 MB/sec
  - Sustained write: Up to 95 MB/sec
- **Capacity**
  - 1, 2, 4, 8, 16 GB
- **RoHS Compliant**
- **NAND Flash Type:** SLC
- **Temperature ranges**
  - Operation:
    Standard: 0℃ to 70℃
    ET*: -40℃ to 85℃
  - Storage: -40℃ to 100℃
- **Intelligent endurance design**
  - Built-in hardware ECC, enabling up to 14-bit correction per 512 bytes or 28-bit correction per 1K bytes.
  - Dynamic/Static wear-leveling scheme together with dynamical block allocation to significantly increase the lifetime of a flash device and optimize the disk performance
  - Flash bad-block management
  - S.M.A.R.T.
  - Power Failure Management
  - ATA Secure Erase
  - Trim

***Extended Temperature**

© 2011 Apacer Technology Inc.

Table of Contents

1. GENERAL DESCRIPTION 3

1.1 PERFORMANCE-OPTIMIZED CONTROLLER 3
1.1.1 Power Management Unit (PMU) 3
1.1.2 SRAM Buffer 3

2. FUNCTIONAL BLOCK 4

3. PIN ASSIGNMENTS 5

4. CAPACITY SPECIFICATION 7

4.1 PERFORMANCE 7
4.2 ENVIRONMENTAL SPECIFICATIONS 7

5. FLASH MANAGEMENT 8

5.1 ERROR CORRECTION/DETECTION 8
5.2 BAD BLOCK MANAGEMENT 8
5.3 WEAR LEVELING 8
5.4 POWER FAILURE MANAGEMENT 8
5.5 ATA SECURE ERASE 8
5.6 S.M.A.R.T. 9
5.7 TRIM 9

6. SOFTWARE INTERFACE 10

6.1 ATA COMMAND SET 10

7. ELECTRICAL SPECIFICATION 11

7.1 ABSOLUTE MAXIMUM RATING 11
7.2 RECOMMENDED OPERATION CONDITIONS 11

8. PHYSICAL CHARACTERISTICS 12

8.1 DIMENSION 12

9. PRODUCT ORDERING INFORMATION 13

9.1 PRODUCT CODE DESIGNATIONS 13
9.2 VALID COMBINATIONS 14
9.2.1 Standard Temperature 14
9.2.2 Extended Temperature 14

© 2011 Apacer Technology Inc.

1. General Description

Apacer's CFast offers the most reliable and high performance storage which contains a controller, embedded firmware, and flash media along with a male connector. Using NAND flash memory devices, CFast interfaces with the host allowing data to be seamlessly transferred between the host and the flash devices.

CFast is designed with a single-chip controller, offering capacities of up to 16 gigabytes and providing full support for the SATA II high-speed interface standard. It can operate at sustained access rates of up to 100 megabytes per second, which is much faster than any other solid-state or traditional SATA drive currently available on the market.

In addition to buffer management through dynamical allocation, CFast adopts the Apacer-specific dynamic/static wear-leveling scheme to allow uniform use of all storage blocks, ensuring that the lifetime of a flash media can be significantly increased and the disk performance is optimized as well.

1.1 Performance-Optimized Controller

The controller translates standard signals into flash media data and control signals.

1.1.1 Power Management Unit (PMU)

The power management unit (PMU) controls the power consumption of the card controller. It reduces the power consumption of the controller by putting circuitry not in operation into sleep mode. The PMU has zero wake-up latency.

1.1.2 SRAM Buffer

The controller performs as an SRAM buffer to optimize the host's data transfer to and from the flash media.

© 2011 Apacer Technology Inc.

2. Functional Block

CFast drive includes a single-chip SATA II Controller and the flash media, as well as the SATA standard interface. The controller integrates the flash management unit with the controller itself to support multi-channel, multi-bank flash arrays. Figure 2-1 shows the functional block diagram.

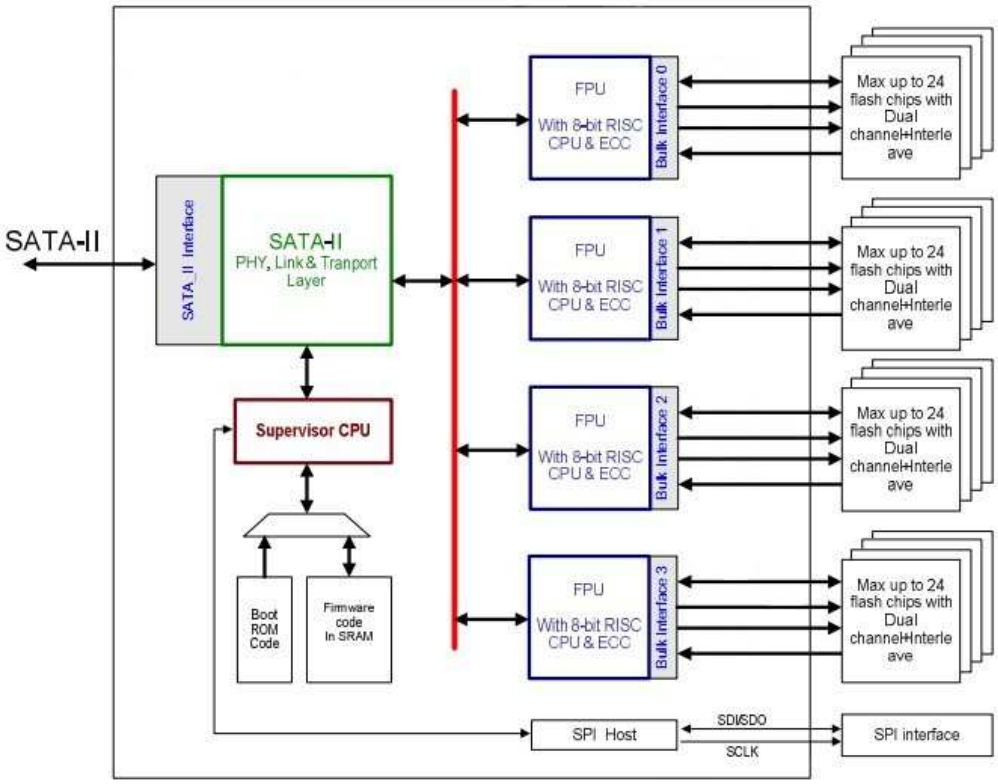

Figure 2-1 Apacer CFast block diagram

© 2011 Apacer Technology Inc.

3. Pin Assignments

Table 3-1 describes CFast signal segment, and Table 3-2, its power segment.

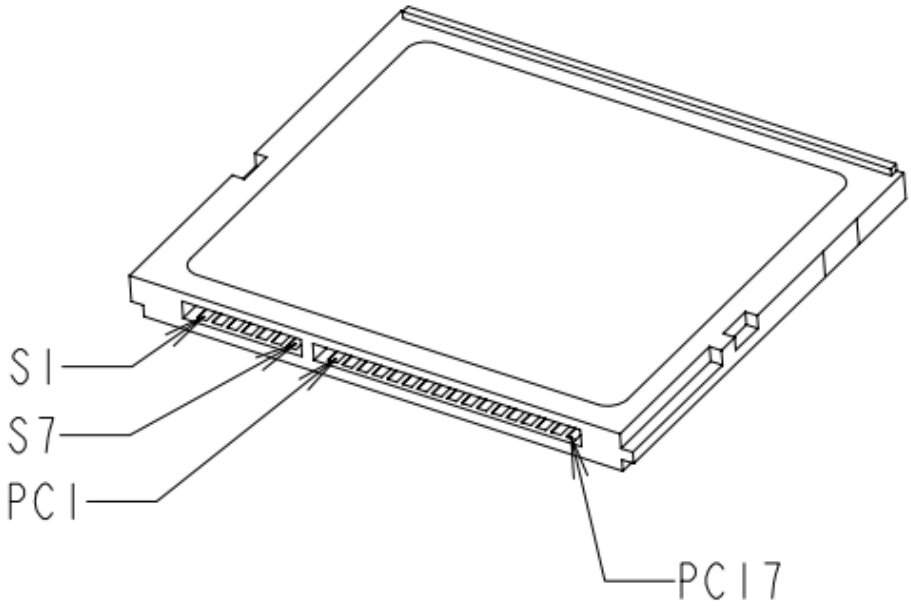

Figure 3-1 Pin Assignment

Table 3-1: Signal segment

PinC	Type	Description
S1	GND	
S2	A+	SATA Differential Signal Pair A
S3	A-	
S4	GND	
S5	B-	SATA Differential Signal Pair B
S6	B+	
S7	GND	

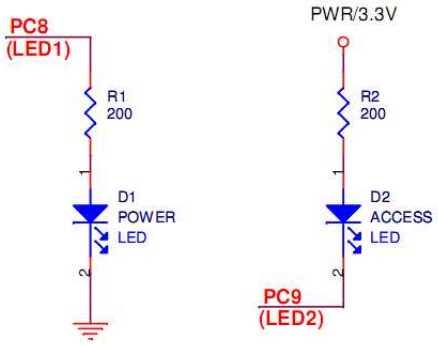

*Refer above for LED output design guide

Table 3-2: Power segment

Pin	Name	Type	Description
PC1	CDI	CMOS Input	Card Detect In
PC2	GND	Device GND	
PC3	TBD	TBD	
PC4	TBD	TBD	
PC5	TBD	TBD	
PC6	TBD	TBD	
PC7	GND	Device GND	
PC8*	LED1	LED Output	Power
PC9*	LED2	LED Output	Access
PC10	IO1	CMOS Input/Output	Reserved Input/Output
PC11	IO2	CMOS Input/Output	Reserved Input/Output
PC12	IO3	CMOS Input/Output	Reserved Input/Output
PC13	PWR	3.3V	Device Power (3.3V)
PC14	PWR	3.3V	Device Power (3.3V)
PC15	PGND	Device GND	Device GND
PC16	PGND	Device GND	Device GND
PC17	CDO	CMOS Output	Card Detect Out

© 2011 Apacer Technology Inc.

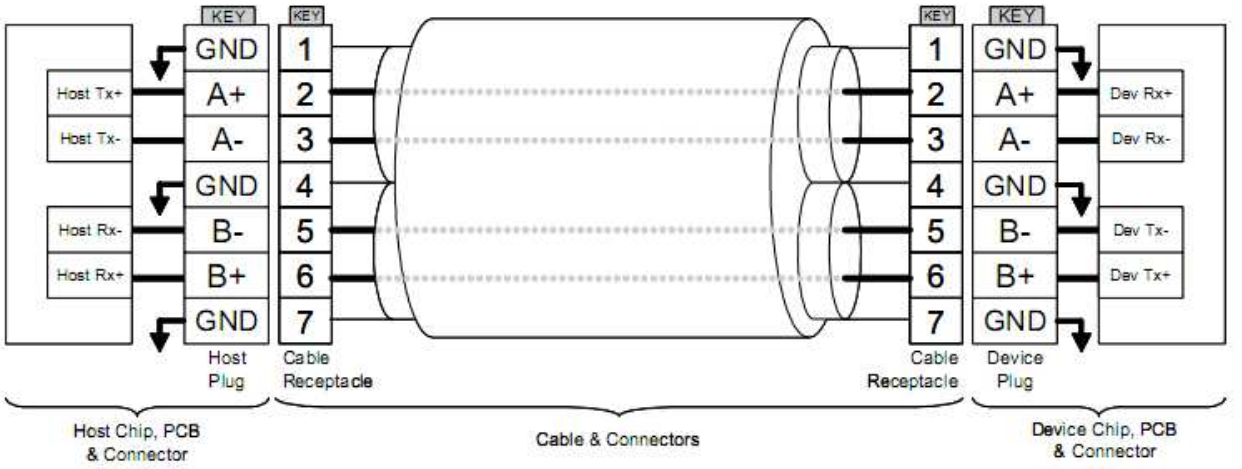

Figure 3-2 SATA Cable / Connector Connection Diagram

The connector on the left represents the Host with TX/RX differential pairs connected to a cable while the connector on the right shows the Device with TX/RX differential pairs also connected to the cable. Notice also the ground path connecting the shielding of the cable to the Cable Receptacle.

© 2011 Apacer Technology Inc.

4. Capacity Specification

Capacity specification of the Compact Flash Card series (CFC) is available as shown in Table 4-1. It lists the specific capacity and the default numbers of heads, sectors and cylinders for each product line.

Table 4-1: Capacity specifications

Capacity	Total bytes*	Cylinders	Heads	Sectors	Max LBA
1 GB	988,839,936	1,916	16	63	1,931,328
2 GB	1,982,324,736	3,841	16	63	3,871,728
4 GB	3,952,263,168	7,658	16	63	7,719,264
8 GB	7,913,816,064	15,534	16	63	15,456,672
16 GB	15,842,017,280	16,383**	16	63	30,941,440

*Display of total bytes varies from file systems.
**Cylinders, heads or sectors are not applicable for these capacities. Only LBA addressing applies

4.1 Performance

Performance of CFast product family is available as shown in Table 4-2.

Table 4-2: Performance table

Capacity / Performance	1 GB	2 GB	4 GB	8 GB	16 GB
Sustained Read (MB/s)	30	58	117	117	117
Sustained Write (MB/s)	12	28	46	91	91

Note: Performances vary from flash configurations.

4.2 Environmental Specifications

Environmental specification of the Compact Flash Card series (CFC) which follows the MIL-STD-810F standards is available as shown in Table 4-3.

Table 4-3: Environmental specification

Environment		Specification
Temperature	Operation	0℃ to 70℃ (Standard); -40℃ to 85℃ (Extended Temperature)
	Storage	-40℃ to 100℃
Humidity		5% to 95% RH (Non-condensing)
Vibration (Non-Operation)		Sine wave: 10~2000Hz, 15G (X, Y, Z axes)
Shock (Non-Operation)		Half sine wave, Peak acceleration 50 G, 11 ms (X, Y, Z ; All 6 axes)

© 2011 Apacer Technology Inc.

5. Flash Management

5.1 Error Correction/Detection

CFast implements a hardware ECC scheme, based on the BCH algorithm, to achieve up to 14-bit correction per 512 bytes or 28-bit correction per 1K bytes.

5.2 Bad Block Management

Although bad blocks on the flash media are already identified by the flash manufacturer, they can also be accumulated over time during operation. CFast's controller maintains a table that lists those normal blocks with disk data, the free blocks for wear leveling, and bad blocks with errors. When a normal block is detected broken, it is replaced with a free block and listed as a bad block. When a free block is detected broken, it is then removed from the free block list and marked as a bad block.

During device operation, this ensures that newly accumulated bad blocks are transparent to the host. The device will stop file write service once there are only two free blocks left such that the read function is still available for copying the files from the disk into another.

5.3 Wear Leveling

The NAND flash devices are limited by a certain number of write cycles. When using a FAT-based file system, frequent FAT table updates are required. If some area on the flash wears out faster than others, it would significantly reduce the lifetime of the whole SSD, even if the erase counts of others are far from the write cycle limit. Thus, if the write cycles can be distributed evenly across the media, the lifetime of the media can be prolonged significantly. This scheme is called wear leveling.

Apacer's wear-leveling scheme is achieved both via buffer management and Apacer-specific dynamic/static global wear leveling to ensure the lifetime of the flash media can be increased and the disk access performance is optimized as well.

5.4 Power Failure Management

The Low Power Detection on the controller initiates cached data saving before the power supply to the device is too low. This feature prevents the device from crash and ensures data integrity during an unexpected blackout. Once power was failure before cached data writing back into flash, data in the cache will lost. The next time the power is on, the controller will check these fragmented data segment, and, if necessary, replace them with old data kept in flash until programmed successfully.

5.5 ATA Secure Erase

Accomplished by the Secure Erase (SE) command, which added to the open ANSI standards that control disk drives, "ATA Secure Erase" is built into the disk drive itself and thus far less susceptible to malicious software attacks than external software utilities. It is a positive easy-to-use data destroy command, amounting to electronic data shredding. Executing the command causes a drive to internally completely erase all possible user data. This command is carried out within disk drives, so no additional software is required. Once executed, neither data nor the erase counter on the device would be recoverable, which blurs the accuracy of device lifespan. The process to erase will not be stopped until finished while encountering power failure, and will be continued when power is back on.

© 2011 Apacer Technology Inc.

5.6 S.M.A.R.T.

S.M.A.R.T. is an acronym for Self-Monitoring, Analysis and Reporting Technology, an open standard allowing disk drives to automatically monitor their own health and report potential problems. It protects the user from unscheduled downtime by monitoring and storing critical drive performance and calibration parameters. Ideally, this should allow taking proactive actions to prevent impending drive failure.

Apacer CFast uses the standard SMART command B0h to read data from the drive for SMART feature as the SATA Rev.2.6 ATA/ATAPI-7 specifications. Based on the SFF-8035i Rev. 2.0 specifications, Apacer SMART defines vendor-specified SMART Attribute IDs (A0h, A1h, A2h, A3h, A4h-A5h) in CFast. They represent initial bad block count, bad block count, spare block count, maximum erase count, and average erase counts respectively. When the Apacer SMART Utility running on the host, it analyzes and reports the disk status to the host before CFast is in critical condition.

5.7 Trim

Made of millions of NAND flash cells, SSD can be written into groups called pages in 4K size generally, but can only be erased in larger groups called blocks of 128 pages or 512KB. These stipulations are partially the source of many performance issues. Until an address gets used again, the SSD has to keep track of every last bit of data that's written on it. The ATA-Trim instruction tilts the balance in favor of the SSD. Trim addresses a major part of the performance degradation issue over time that plagues all SSDs. A Trim enabled drive running an OS with Trim supported will stay closer to its peak performance over time.

© 2011 Apacer Technology Inc.

6. Software Interface

6.1 ATA Command Set

Table 6-1 summarizes the ATA command set with the paragraphs that follow describing the individual commands and the task file for each.

Table 6-1: Command set

Code	Command	Code	Command
E5h	Check Power Mode	F3h	Security Erase Prepare
06h	Data Set Management	F4h	Security Erase Unit
90h	Execute Device Diagnostic	F5h	Security Freeze Lock
E7h	Flush Cache	F1h	Security Set Password
EAh	Flush Cache EXT	F2h	Security Unlock
ECh	Identify Device	70h	Seek
E3h	Idle	EFh	Set Features
E1h	Idle Immediate	C6h	Set Multiple Mode
91h	Initialize Device Parameters	E6h	Sleep
C8h	Read DMA	B0h	SMART
25h	Read DMA EXT	E2h	Standby
C4h	Read Multiple	E0h	Standby Immediate
29h	Read Multiple EXT	CAh	Write DMA
20h	Read Sector	35h	Write DMA EXT
24h	Read Sector EXT	C5h	Write Multiple
40h	Read Verify Sectors	39h	Write Multiple EXT
42h	Read Verify Sectors EXT	30h	Write Sector
10h	Recalibrate	34h	Write Sector EXT
F6h	Security Disable Password		

© 2011 Apacer Technology Inc.

7. Electrical Specification

Caution: **Absolute Maximum Stress Ratings –** Applied conditions greater than those listed under "Absolute Maximum Stress Ratings" may cause permanent damage to the device. This is a stress rating only and functional operation of the device at these conditions or conditions greater than those defined in the operational sections of this data sheet is not implied. Exposure to absolute maximum stress rating conditions may affect device reliability.

7.1 Absolute Maximum Rating

Table 7-1 lists Absolute Maximum Rating of CFast.

Table 7-1: Absolute Maximum Rating

Parameter	Symbol	Min	Max	Units
Power Supply	Vcc	-0.3	3.6	V
Input Voltage	Vin	-0.3	Vcc+0.3	V
Output Voltage	Vout	-0.3	Vcc+0.3	V
Storage Temperature	Ts	-40	100	℃

7.2 Recommended Operation Conditions

Table 7-2 lists CFast recommended operation conditions.

Table 7-2: Recommended Operations Conditions

Parameter	Symbol	Min	Typ	Max	Units
Power Supply	Vcc	3.0	3.3	3.6	V
Input Voltage	Vin	0	-	Vcc	V

© 2011 Apacer Technology Inc.

8. Physical Characteristics

8.1 Dimension

TABLE 8-1: CFast physical specification

Length:	36.40 ±0.15 mm
Width:	42.80 ±0.10 mm
Thickness (Including Label Area):	3.6 mm (Max)

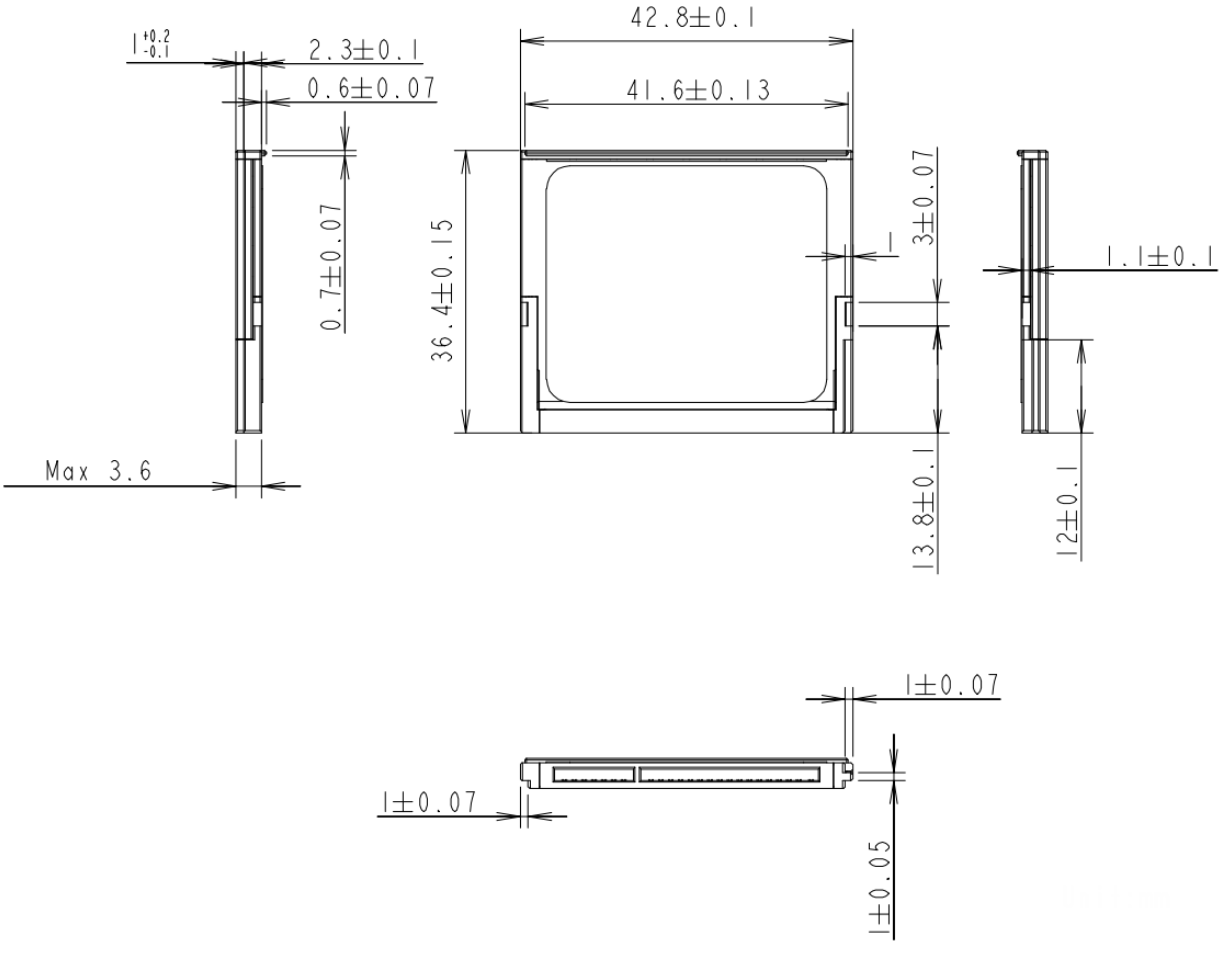

Unit: mm

FIGURE 8-1: Physical dimension

© 2011 Apacer Technology Inc.

9. Product Ordering Information

9.1 Product Code Designations

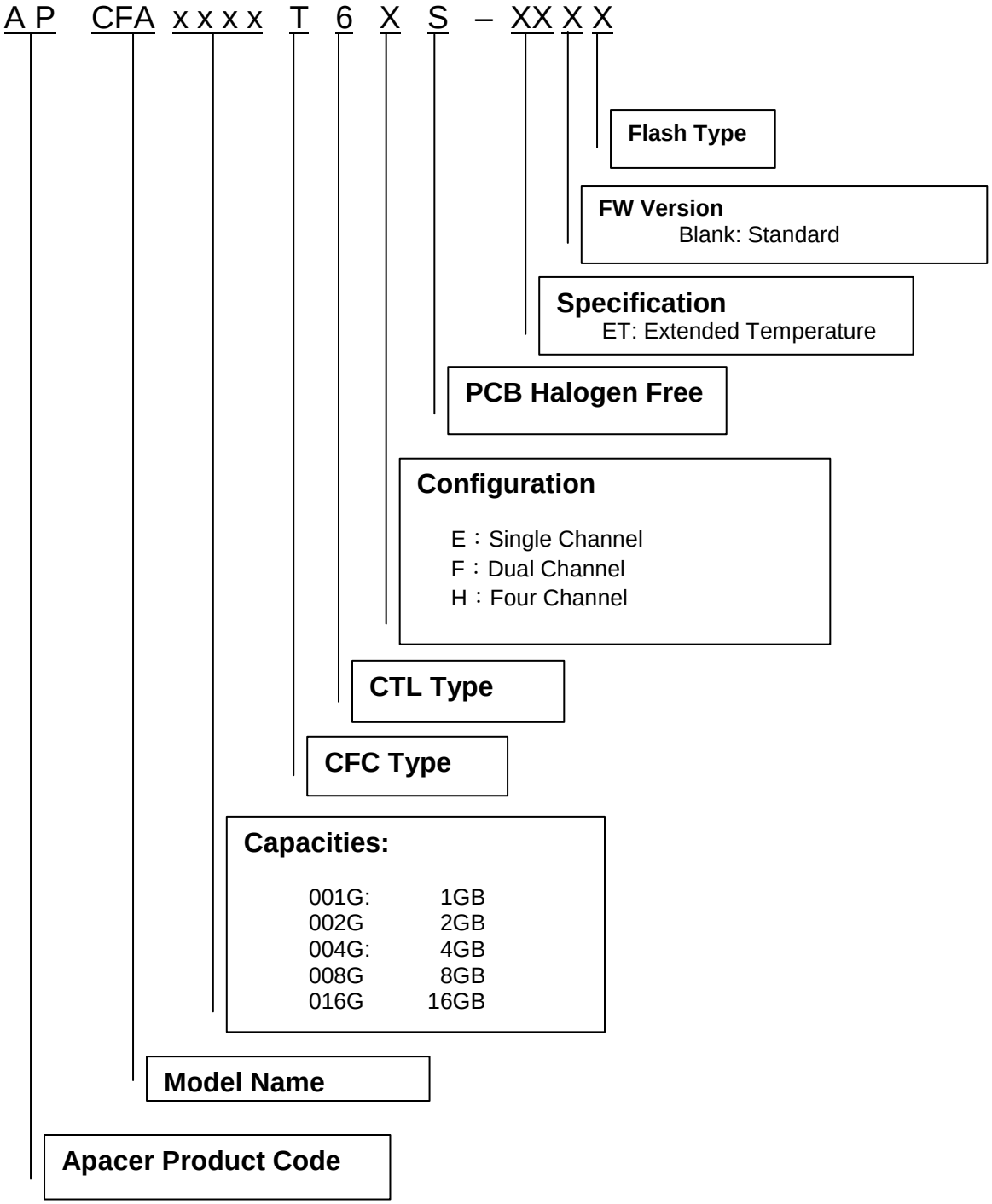

© 2011 Apacer Technology Inc.

9.2 Valid Combinations

9.2.1 Standard Temperature

Capacity	*AP/N*
1 GB	APCFA001GT6ES-T
2 GB	APCFA002GT6FS-T
4 GB	APCFA004GT6HS-T
8 GB	APCFA008GT6HS-T
16 GB	APCFA016GT6HS-T

9.2.2 Extended Temperature

Capacity	*AP/N*
1 GB	APCFA001GT6ES-ETT
2 GB	APCFA002GT6FS-ETT
4 GB	APCFA004GT6HS-ETT
8 GB	APCFA008GT6HS-ETT
16 GB	APCFA016GT6HS-ETT

Note: Valid combinations are those products in mass production or will be in mass production. Consult your Apacer sales representative to confirm availability of valid combinations and to determine availability of new combinations.

© 2011 Apacer Technology Inc.

Revision History

Revision	Date	Description	Remark
0.1	05/19/2010	Preliminary release	
0.2	09/27/2010	Updated pin assignments & drawing	
0.3	10/15/2010	Updated performance & refined context	
0.4	10/18/2010	Updated environmental compliance	
1.0	10/19/2010	Official release	
1.1	11/11/2010	Updated Product Ordering Information & drawing	
1.2	01/14/2011	Updated Product Ordering Information	
1.3	03/15/2011	Updated performance & Product Ordering Information	

© 2011 Apacer Technology Inc.

Global Presence

Taiwan (Headquarters)

Apacer Technology Inc.
4th Fl, 75 Xintai 5th Rd., Sec.1
Hsichih, New Taipei City
Taiwan 221
R.O.C.
Tel: +886-2-2698-2888
Fax: +886-2-2698-2889
amtsales@apacer.com

U.S.A.

Apacer Memory America, Inc.
386 Fairview Way, Suite102,
Milpitas, CA 95035
Tel: 1-408-518-8699
Fax: 1-408-935-9611
sa@apacerus.com

Japan

Apacer Technology Corp.
5F, Matsura Bldg., Shiba, Minato-Ku
Tokyo, 105-0014, Japan
Tel: 81-3-5419-2668
Fax: 81-3-5419-0018
jpservices@apacer.com

Europe

Apacer Technology B.V.
Aziëlaan 22,
5232 BA 's-Hertogenbosch,
The Netherlands
Tel: 31-73-645-9620
Fax: 31-73-645-9629
sales@apacer.nl

China

Apacer Electronic (Shanghai) Co., Ltd
1301, No.251,Xiaomuqiao Road, Shanghai,
200032, China
Tel: 86-21-5529-0222
Fax: 86-21-5206-6939
sales@apacer.com.cn

India

Apacer Technologies Pvt Ltd,
#1064, 1st Floor, 7th 'A' Main,
3rd Block Koramangala, Bangalore – 560 034
Tel: +91 80 4152 9061/62/63
Fax: +91 80 4170 0215
sales_india@apacer.com

© 2011 Apacer Technology Inc.