*RoHS Compliant*

# *Value Added* Compact Flash Series Ⅲ

***Specification for Industrial CF***

**February 11, 2009**

*Version 1.2*

***Apacer Technology Inc.***
9/F, No. 100, Hsin Tai Wu Rd., Hsichih, Taipei Hsien 221, Taiwan
Tel: +886-2-2696-1666 Fax: +886-2-2696-1668
www.apacer.com



**© 2009 Apacer Technology Inc.**

# Features:

- **Compact Flash Association Specification Revision 3.0 Standard Interface**
  - ATA command set compatible
  - ATA mode support for up to:
    PIO Mode-6
    Multiword DMA Mode-4
    Ultra DMA Mode-4
- **Connector Type**
  - 50 pins female
- **Low power consumption (typical)**
  - Supply voltage: 3.3V & 5V
  - Active mode: 80 mA/95 mA (3.3V/5.0V)
  - Sleep mode: 700 µA/900 µA (3.3V/5.0V)
- **Performance**
  - Sustained read: up to 35 MB/sec
  - Sustained write:
    Standard: up to 15 MB/sec
    High Speed: up to 25 MB/sec
- **Capacity**
  - Standard:
    128, 256, 512 MB
    1, 2, 16 GB
  - High Speed:
    256, 512 MB
    1, 2, 4, 8 GB
- **NAND flash type: SLC**
- **Temperature ranges**
  - Operation:
    Standard: 0℃ to 70℃
    ET[1]: -40℃ to 85℃
  - Storage: -40℃ to 100℃
- **Flash management**
  - Intelligent endurance design
    *Advanced wear-leveling algorithms*
    *S.M.A.R.T. Technology*
    *Built-in Hardware ECC*
    *Enhanced Data Integrity*
  - Intelligent power failure recovery
- **RoHS compliant**

**1.** Extended Temperature


© 2009 Apacer Technology Inc.

# Table of Contents

**1. GENERAL DESCRIPTION ..... 4**

1.1 PERFORMANCE-OPTIMIZED CONTROLLER ..... 4
*1.1.1 Power Management Unit (PMU) ..... 4*
*1.1.2 SRAM Buffer ..... 4*

**2. FUNCTIONAL BLOCK ..... 5**

**3. PIN ASSIGNMENTS ..... 6**

**4. CAPACITY SPECIFICATION ..... 8**

4.1 PERFORMANCE SPECIFICATION ..... 8
4.2 ENVIRONMENTAL SPECIFICATIONS ..... 9

**5. FLASH MANAGEMENT ..... 10**

5.1 INTELLIGENT ENDURANCE DESIGN ..... 10
*5.1.1 Advanced wear-leveling algorithms ..... 10*
*5.1.2 S.M.A.R.T. Technology ..... 10*
*5.1.3 Built-in Hardware ECC ..... 10*
*5.1.4 Enhanced Data Integrity ..... 10*
5.2 INTELLIGENT POWER FAILURE RECOVERY ..... 11

**6. SOFTWARE INTERFACE ..... 12**

6.1 COMMAND SET ..... 12

**7. ELECTRICAL SPECIFICATION ..... 14**

**8. PHYSICAL CHARACTERISTICS ..... 15**

8.1 DIMENSION ..... 15

**9. PRODUCT ORDERING INFORMATION ..... 16**

9.1 PRODUCT CODE DESIGNATIONS ..... 16
9.2 VALID COMBINATIONS ..... 17



© 2009 Apacer Technology Inc.

# 1. General Description

Apacer's Industrial Compact Flash Card (CFC) offers the most reliable and high performance storage which is compatible with CF Type I and Type II devise. Unlike the ordinary consumer Compact Flash cards, Apacer Industrial Compact Flash card provides solid traceability to ensure all products HW/SW are the same as you qualified.

Apacer's CFC provides complete PCMCIA - ATA functionality and compatibility. Apacer 's Compact Flash technology is designed for use in Point of Sale (POS) terminals, telecom, IP-STB, medical instruments, surveillance systems, industrial PCs and handheld applications.

Featuring technologies as Advanced Wear-leveling algorithms, S.M.A.R.T, Enhanced Data Integrity, Built-in Hardware ECC, and Intelligent Power Failure Recovery, Apacer's Industrial Compact Flash Card assures users of a versatile device on data storage.

## 1.1 Performance-Optimized Controller

The Compact Flash Card Controller translates standard CF signals into flash media data and control signals.

### 1.1.1 Power Management Unit (PMU)

The power management unit (PMU) controls the power consumption of the Compact Flash card controller. It reduces the power consumption of the Compact Flash Card Controller by putting circuitry not in operation into sleep mode. The PMU has zero wake-up latency.

### 1.1.2 SRAM Buffer

The Compact Flash Card Controller performs as an SRAM buffer to optimize the host's data transfer to and from the flash media.


© 2009 Apacer Technology Inc.

# 2. Functional Block

The Compact Flash Card (CFC) includes a controller and flash media, as well as the Compact Flash standard interface. Figure 2-1 shows the functional block diagram.

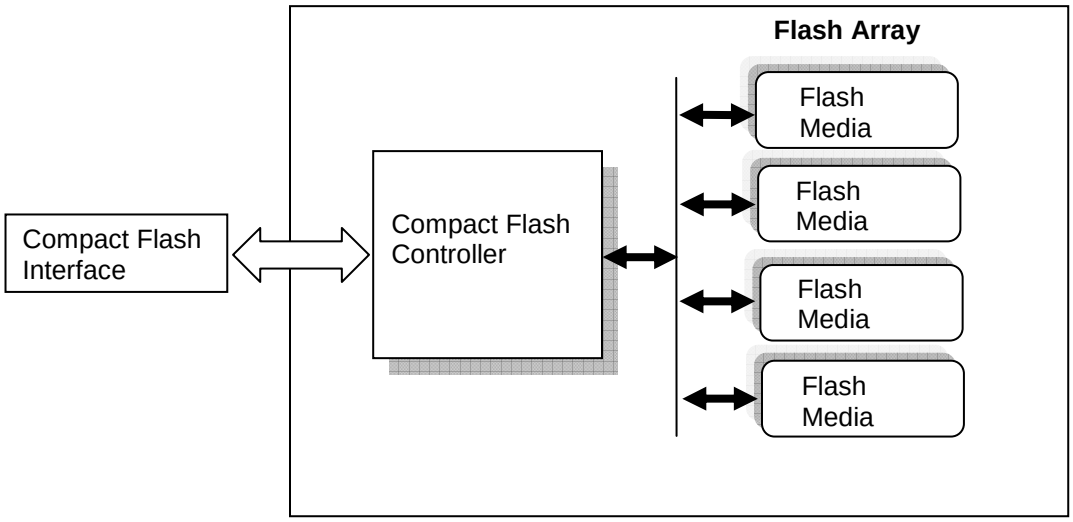


**Figure 2-1:** Functional block diagram


© 2009 Apacer Technology Inc.

# 3. Pin Assignments

Table 3-1 lists the pin assignments with respective signal names for the 50-pin configuration. A "#" suffix indicates the active low signal. The pin type can be input, output or input/output.

**Table 3-1:** Pin assignments (1 of 2)

| Pin No. | Memory card mode | | I/O card mode | | True IDE mode | |
|---|---|---|---|---|---|---|
| | Signal name | Pin I/O type | Signal name | Pin I/O type | Signal name | Pin I/O type |
| 1 | GND | - | GND | - | GND | - |
| 2 | D3 | I/O | D3 | I/O | D3 | I/O |
| 3 | D4 | I/O | D4 | I/O | D4 | I/O |
| 4 | D5 | I/O | D5 | I/O | D5 | I/O |
| 5 | D6 | I/O | D6 | I/O | D6 | I/O |
| 6 | D7 | I/O | D7 | I/O | D7 | I/O |
| 7 | #CE1 | I | #CE1 | I | #CE1 | I |
| 8 | A10 | I | A10 | I | A10[1] | I |
| 9 | #OE | I | #OE | I | #OE | I |
| 10 | A9 | I | A9 | I | A9[1] | I |
| 11 | A8 | I | A8 | I | A8[1] | I |
| 12 | A7 | I | A7 | I | A7[1] | I |
| 13 | VCC | - | VCC | - | VCC | - |
| 14 | A6 | I | A6 | I | A6[1] | I |
| 15 | A5 | I | A5 | I | A5[1] | I |
| 16 | A4 | I | A4 | I | A4[1] | I |
| 17 | A3 | I | A3 | I | A3[1] | I |
| 18 | A2 | I | A2 | I | A2 | I |
| 19 | A1 | I | A1 | I | A1 | I |
| 20 | A0 | I | A0 | I | A0 | I |
| 21 | D0 | I/O | D0 | I/O | D0 | I/O |
| 22 | D1 | I/O | D1 | I/O | D1 | I/O |
| 23 | D2 | I/O | D2 | I/O | D2 | I/O |
| 24 | WP | O | #IOCS16 | O | #IOCS16 | O |
| 25 | #CD2 | O | #CD2 | O | #CD2 | O |
| 26 | #CD1 | O | #CD1 | O | #CD1 | O |
| 27 | D11 | I/O | D11 | I/O | D11 | I/O |
| 28 | D12 | I/O | D12 | I/O | D12 | I/O |
| 29 | D13 | I/O | D13 | I/O | D13 | I/O |
| 30 | D14 | I/O | D14 | I/O | D14 | I/O |
| 31 | D15 | I/O | D15 | I/O | D15 | I/O |
| 32 | #CE2 | I | #CE2 | I | #CE2 | I |
| 33 | #VS1 | O | #VS1 | O | #VS1 | O |
| 34 | #IORD | I | #IORD | I | #IORD | I |
| 35 | #IOWR | I | #IOWR | I | #IOWR | I |
| 36 | #WE | I | #WE | I | #WE | I |
| 37 | RDY/-BSY | O | -IREQ | O | INTRQ | O |
| 38 | VCC | - | VCC | - | VCC | - |
| 39 | #CSEL | I | #CSEL | I | #CSEL | I |
| 40 | #VS2 | O | #VS2 | O | #VS2 | O |
| 41 | RESET | I | RESET | I | RESET | I |


© 2009 Apacer Technology Inc.

**Table 3-1:** Pin assignments (2 of 2)

| Pin No. | Memory card mode | | I/O card mode | | True IDE mode | |
|---|---|---|---|---|---|---|
| | Signal name | Pin I/O type | Signal name | Pin I/O type | Signal name | Pin I/O type |
| 42 | #WAIT | O | #WAIT | O | IORDY | O |
| 43 | #INPACK | O | #INPACK | O | DMARQ[2] | O |
| 44 | -REG | I | #REG | I | DMACK[2] | I |
| 45 | BVD2 | O | #SPKR | O | #DASP | O |
| 46 | BVD1 | O | #STSCHG | O | #PDIAG | O |
| 47 | D8 | I/O | D8 | I/O | D8 | I/O |
| 48 | D9 | I/O | D9 | I/O | D9 | I/O |
| 49 | D10 | I/O | D10 | I/O | D10 | I/O |
| 50 | GND | - | GND | - | GND | - |

1. The signal should be tied to VCC by the host.
2. Connection required when UDMA is in use.


© 2009 Apacer Technology Inc.

# 4. Capacity Specification

Capacity specification of the Compact Flash Card series (CFC) is available as shown in Table 4-1. It lists the specific capacity and the default numbers of heads, sectors and cylinders for each product line.

**Table 4-1:** Capacity specifications

| Capacity | Total bytes | Cylinders | Heads | Sectors | Max LBA |
|---|---|---|---|---|---|
| 128 MB | 127,641,600 | 980 | 8 | 32 | 250,880 |
| 256 MB | 256,352,256 | 980 | 16 | 32 | 501,760 |
| 512 MB | 511,664,128 | 993 | 16 | 63 | 1,000,944 |
| 1GB | 1,024,655,360 | 1,986 | 16 | 63 | 2,001,888 |
| 2GB | 2,048,589,824 | 3,970 | 16 | 63 | 4,001,760 |
| 4GB | 4,100,059,136 | 7,964 | 16 | 63 | 8,027,712 |
| 8GB | 8,176,340,992 | 15,880 | 16 | 63 | 16,007,040 |
| 16GB | 16,368,721,920 | 16,383* | 16 | 63 | 32,014,080 |

**1.** Cylinders, heads or sectors are not applicable for these capacities. Only LBA addressing applies

## 4.1 Performance Specification

Performances of the Standard and High Speed ATA-Flash Disk are listed in Table 4-2 and Table 4-3.

**Table 4-2:** Standard Performance specifications

| Capacity / Performance | 128 MB / 256 MB | 512 MB / 1 GB | 2 GB | 16 GB |
|---|---|---|---|---|
| **Sustained read (MB/s)** | 18 | 30 | 35 | 22 |
| **Sustained write (MB/s)** | 7 | 12 | 15 | 15 |

**Table 4-3:** High Speed Performance specifications

| Capacity / Performance | 256 MB / 512 MB | 1GB / 2 GB / 4 GB / 8 GB |
|---|---|---|
| **Sustained read (MB/s)** | 30 | 35 |
| **Sustained write (MB/s)** | 13 | 22~25 |


© 2009 Apacer Technology Inc.

## 4.2 Environmental Specifications

Environmental specification of the Compact Flash Card series (CFC) which follows the MIL-STD-810F standards is available as shown in Table 4-4.

**Table 4-4:** Environmental specifications

| Environment | | Specification |
|---|---|---|
| Temperature | Operation | 0℃ to 70℃; -40℃ to 85℃ (ET [1]) |
| | Storage | -40℃ to 100℃ |
| Humidity | | 5% to 95% RH (Non-condensing) |
| Vibration (Non-Operation) | | Sine wave: 10~2000Hz, 15G (X, Y, Z axes) |
| Shock (Non-Operation) | | Half sine wave, Peak acceleration 50 G, 11 ms (X, Y, Z ; All 6 axes) |

**1.** Extended Temperature


© 2009 Apacer Technology Inc.

# 5. Flash Management

## 5.1 Intelligent Endurance Design

### 5.1.1 Advanced wear-leveling algorithms

The NAND flash devices are limited by a certain number of write cycles. When using a file system, frequent file table updates is mandatory. If some area on the flash wears out faster than others, it would significantly reduce the lifetime of the whole device, even if the erase counts of others are far from the write cycle limit. Thus, if the write cycles can be distributed evenly across the media, the lifetime of the media can be prolonged significantly. The scheme is achieved both via buffer management and Apacer-specific advanced wear leveling to ensure that the lifetime of the flash media can be increased, and the disk access performance is optimized as well.

### 5.1.2 S.M.A.R.T. technology

S.M.A.R.T. is an acronym for Self-Monitoring, Analysis and Reporting Technology, an open standard allowing disk drives to automatically monitor their own health and report potential problems. It protects the user from unscheduled downtime by monitoring and storing critical drive performance and calibration parameters. Ideally, this should allow taking proactive actions to prevent impending drive failure. Apacer SMART feature adopts the standard SMART command B0h to read data from the drive. When the Apacer SMART Utility running on the host, it analyzes and reports the disk status to the host before the device is in critical condition.

### 5.1.3 Built-in hardware ECC

The ATA-Disk Module uses BCH Error Detection Code (EDC) and Error Correction Code (ECC) algorithms which correct up to eight random single-bit errors for each 512-byte block of data. High performance is fulfilled through hardware-based error detection and correction.

### 5.1.4 Enhanced data integrity

The properties of NAND flash memory make it ideal for applications that require high integrity while operating in challenging environments. The integrity of data to NAND flash memory is generally maintained through ECC algorithms and bad block management. Flash controllers can support up to 8 bits ECC capability for accuracy of data transactions, and bad block management is a preventive mechanism from loss of data by retiring unusable media blocks and relocating the data to the other blocks, along with the integration of advanced wear leveling algorithms, so that the lifespan of device can be expanded.


© 2009 Apacer Technology Inc.

## 5.2 Intelligent Power Failure Recovery

The Low Power Detection on the controller initiates cached data saving before the power supply to the device is too low. This feature prevents the device from crash and ensures data integrity during an unexpected blackout. Once power was failure before cached data writing back into flash, data in the cache will lost. The next time the power is on, the controller will check these fragmented data segment, and, if necessary, replace them with old data kept in flash until programmed successfully.


© 2009 Apacer Technology Inc.

# 6. Software Interface

## 6.1 Command Set

Table 6-1 summarizes the command set with the paragraphs that follow describing the individual commands and the task file for each.

**Table 6-1:** Command set (1 of 2)

| Command | Code | FR[1] | SC[2] | SN[3] | CY[4] | DH[5] | LBA[6] |
|---|---|---|---|---|---|---|---|
| Check-Power-Mode | E5H or 98H | - | - | - | - | D[8] | - |
| Execute-Drive-Diagnostic | 90H | - | - | - | - | D | - |
| Erase Sector(s) | C0H | - | Y | Y | Y | Y | Y |
| Flush-Cache | E7H | - | - | - | - | D | - |
| Format Track | 50H | - | Y[7] | - | Y | Y[8] | Y |
| Identify-Drive | ECH | - | - | - | - | D | - |
| Idle | E3H or 97H | - | Y | - | - | D | - |
| Idle-Immediate | E1H or 95H | - | - | - | - | D | - |
| Initialize-Drive-Parameters | 91H | - | Y | - | - | Y | - |
| NOP | 00H | - | - | - | - | D | - |
| Read-Buffer | E4H | - | - | - | - | D | - |
| Read-DMA | C8H or C9H | - | Y | Y | Y | Y | Y |
| Read-Multiple | C4H | - | Y | Y | Y | Y | Y |
| Read-Sector(s) | 20H or 21H | - | Y | Y | Y | Y | Y |
| Read-Verify-Sector(s) | 40H or 41H | - | Y | Y | Y | Y | Y |
| Recalibrate | 1XH | - | - | - | - | D | - |
| Request-Sense | 03H | - | - | - | - | D | - |
| Seek | 7XH | - | - | Y | Y | Y | Y |
| Set-Features | EFH | Y[7] | - | - | - | D | - |


© 2009 Apacer Technology Inc.

**Table 6-1: Command set (2 of 2)**

| Command | Code | FR[1] | SC[2] | SN[3] | CY[4] | DH[5] | LBA[6] |
|---|---|---|---|---|---|---|---|
| SMART | B0H | Y | Y | Y | Y | D | |
| Set-Multiple-Mode | C6H | - | Y | - | - | D | - |
| Set-Sleep-Mode | E6H or 99H | - | - | - | - | D | - |
| Standby | E2H or 96H | - | - | - | - | D | - |
| Standby-Immediate | E0H or 94H | - | - | - | - | D | - |
| Translate-Sector | 87H | - | Y | Y | Y | Y | Y |
| Write-Buffer | E8H | - | - | - | - | D | - |
| Write-DMA | CAH or CBH | - | Y | Y | Y | Y | Y |
| Write-Multiple | C5H | - | Y | Y | Y | Y | Y |
| Write-Multiple-Without-Erase | CDH | - | Y | Y | Y | Y | Y |
| Write-Sector(s) | 30H or 31H | - | Y | Y | Y | Y | Y |
| Write-Sector-Without-Erase | 38H | - | Y | Y | Y | Y | Y |
| Write-Verify | 3CH | - | Y | Y | Y | Y | Y |

**1.** FR - Features register
**2.** SC - Sector Count register
**3.** SN - Sector Number register
**4.** CY - Cylinder registers
**5.** DH - Drive/Head register
**6.** LBA - Logical Block Address mode supported (see command descriptions for use)
**7.** Y - The register contains a valid parameter for this command
**8.** For the Drive/Head register:
Y means both the CFC and Head parameters are used
D means only the CFC parameter is valid and not the Head parameter


**© 2009 Apacer Technology Inc.**

# 7. Electrical Specification

***Caution:*** **Absolute Maximum Stress Ratings –** Applied conditions greater than those listed under "Absolute Maximum Stress Ratings" may cause permanent damage to the device. This is a stress rating only and functional operation of the device at these conditions or conditions greater than those defined in the operational sections of this data sheet is not implied. Exposure to absolute maximum stress rating conditions may affect device reliability.

**Table 7-1:** Operating range

| Range | Ambient Temperature | 3.3V | 5V |
|---|---|---|---|
| Standard | 0℃ to +70℃ | 3.135-3.465V | 4.75-5.25V |
| Extended Temperature | -40℃ to +85℃ | | |

**Table 7-2:** Absolute maximum power pin stress ratings

| Parameter | Symbol | Conditions |
|---|---|---|
| Input Power | $V_{DD}$ | -0.3V min. to 6.5V max. |
| Voltage on any pin except $V_{DD}$ with respect to GND | V | -0.5V min. to VDD + 0.5V max. |

**Table 7-3:** Recommended system power-up timing

| Symbol | Parameter | Typical | Maximum | Units |
|---|---|---|---|---|
| $T_{PU-READY}$[1] | Power-up to Ready Operation | 200 | 1000 | ms |
| $T_{PU-WRITE}$[1] | Power-up to Write Operation | 200 | 1000 | ms |

1. This parameter is measured only for initial qualification and after a design or process change that could affect this parameter.


© 2009 Apacer Technology Inc.

# 8. Physical Characteristics

## 8.1 Dimension

**TABLE 8-1:** Type I CFC physical specification

| | |
|---|---|
| **Length:** | 36.40 +/- 0.15mm (1.433+/- 0.06 in.) |
| **Width:** | 42.80 +/- 0.10mm (1.685+/- 0.04 in.) |
| **Thickness (Including Label Area):** | 3.3mm+/-0.10mm (0.130+/-0.04in.) |

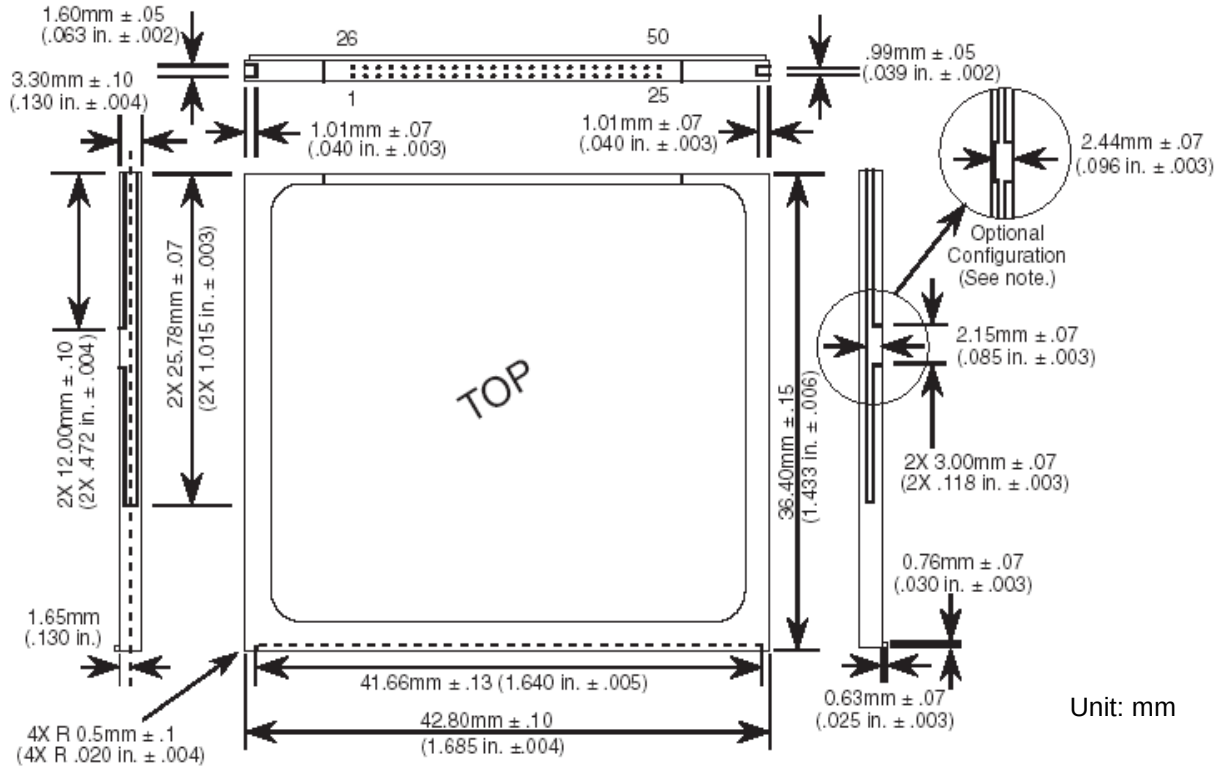


**FIGURE 8-1:** Physical dimension


© 2009 Apacer Technology Inc.

# 9. Product Ordering Information

## 9.1 Product Code Designations

A P – C F x x x x E 3 X R – XXXXJ

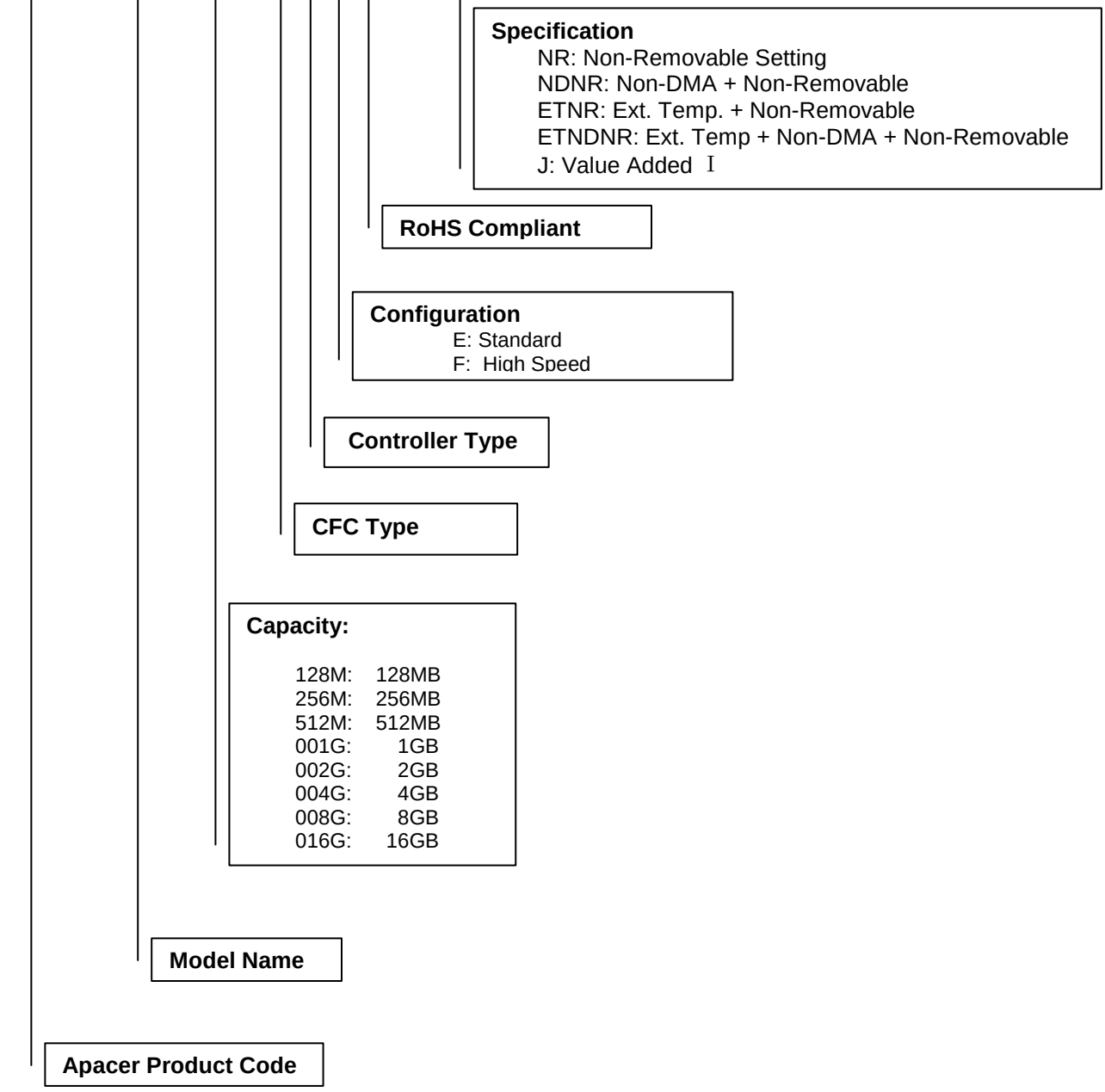



© 2009 Apacer Technology Inc.

## 9.2 Valid Combinations

### Standard Temperature

**Non-Removable**

**Standard** **High Speed**

| Capacity | P/N | Capacity | P/N |
|---|---|---|---|
| 128MB | AP-CF128ME3ER-NRJ | 256MB | AP-CF256ME3FR-NRJ |
| 256MB | AP-CF256ME3ER-NRJ | 512MB | AP-CF512ME3FR-NRJ |
| 512MB | AP-CF512ME3ER-NRJ | 1GB | AP-CF001GE3FR-NRJ |
| 1GB | AP-CF001GE3ER-NRJ | 2GB | AP-CF001GE3FR-NRJ |
| 2GB | AP-CF002GE3ER-NRJ | 4GB | AP-CF004GE3FR-NRJ |
| 16GB | AP-CF016GE3ER-NRJ | 8GB | AP-CF008GE3FR-NRJ |

**Non-DMA & Non-Removable**

**Standard** **High Speed**

| Capacity | P/N | Capacity | P/N |
|---|---|---|---|
| 128MB | AP-CF128ME3ER-NDNRJ | 256MB | AP-CF256ME3FR-NDNRJ |
| 256MB | AP-CF256ME3ER-NDNRJ | 512MB | AP-CF512ME3FR-NDNRJ |
| 512MB | AP-CF512ME3ER-NDNRJ | 1GB | AP-CF001GE3FR-NDNRJ |
| 1GB | AP-CF001GE3ER-NDNRJ | 2GB | AP-CF001GE3FR-NDNRJ |
| 2GB | AP-CF002GE3ER-NDNRJ | 4GB | AP-CF004GE3FR-NDNRJ |
| 16GB | AP-CF016GE3ER-NDNRJ | 8GB | AP-CF008GE3FR-NDNRJ |


© 2009 Apacer Technology Inc.

## Extended Temperature

### Non-Removable

**Standard**

| Capacity | P/N |
|---|---|
| 128MB | AP-CF128ME3ER-ETNRJ |
| 256MB | AP-CF256ME3ER-ETNRJ |
| 512MB | AP-CF512ME3ER-ETNRJ |
| 1GB | AP-CF001GE3ER-ETNRJ |
| 2GB | AP-CF002GE3ER-ETNRJ |
| 16GB | AP-CF016GE3ER-ETNRJ |

**High Speed**

| Capacity | P/N |
|---|---|
| 256MB | AP-CF256ME3FR-ETNRJ |
| 512MB | AP-CF512ME3FR-ETNRJ |
| 1GB | AP-CF001GE3FR-ETNRJ |
| 2GB | AP-CF001GE3FR-ETNRJ |
| 4GB | AP-CF004GE3FR-ETNRJ |
| 8GB | AP-CF008GE3FR-ETNRJ |

### Non-DMA & Non-Removable

**Standard**

| Capacity | P/N |
|---|---|
| 128MB | AP-CF128ME3ER-ETNDNRJ |
| 256MB | AP-CF256ME3ER-ETNDNRJ |
| 512MB | AP-CF512ME3ER-ETNDNRJ |
| 1GB | AP-CF001GE3ER-ETNDNRJ |
| 2GB | AP-CF002GE3ER-ETNDNRJ |
| 16GB | AP-CF016GE3ER-ETNDNRJ |

**High Speed**

| Capacity | P/N |
|---|---|
| 256MB | AP-CF256ME3FR-ETNDNRJ |
| 512MB | AP-CF512ME3FR-ETNDNRJ |
| 1GB | AP-CF001GE3FR-ETNDNRJ |
| 2GB | AP-CF001GE3FR-ETNDNRJ |
| 4GB | AP-CF004GE3FR-ETNDNRJ |
| 8GB | AP-CF008GE3FR-ETNDNRJ |


© 2009 Apacer Technology Inc.

# Revision History

| Revision | Date | Description | Remark |
|---|---|---|---|
| 1.0 | 12/30/2008 | Official release | |
| 1.1 | 01/08/2009 | Context revised | |
| 1.2 | 02/11/2009 | Modified document layout | |


© 2009 Apacer Technology Inc.

# Global Presence

**Taiwan (Headquarters)**

**Apacer Technology Inc.**
9F, 100, Sec. 1, Hsin Tai Wu Rd.,
Hsichih, 221 Taipei Hsien
Taiwan, R.O.C.
Tel: +886-2-2696-1666
Fax: +886-2-2696-1668
amtsales@apacer.com

**U.S.A.**

**Apacer Memory America, Inc.**
386 Fairview Way, Suite102,
Milpitas, CA 95035
Tel: 1-408-586-1291
Fax: 1-408-935-9611
sa@apacerus.com

**Japan**

**Apacer Technology Corp.**
5F, Matsura Bldg., Shiba, Minato-Ku
Tokyo, 105-0014, Japan
Tel: 81-3-5419-2668
Fax: 81-3-5419-0018
jpservices@apacer.com

**Europe**

**Apacer Technology B.V.**
Europalaan 89
5232 BC 'S-Hertogenbosch
The Netherlands
Tel: 31-73-645-9620
Fax: 31-73-645-9629
sales@apacer.nl

**China**

**Apacer Electronic (Shanghai) Co., Ltd**
1301, No.251,Xiaomuqiao Road, Shanghai,
200032, China
Tel: 86-21-5529-0222
Fax: 86-21-5206-6939
sales@apacer.com.cn

**India**

**Apacer Technologies Pvt. Ltd.**
#143, 1st Floor, Raheja Arcade,
5th Block Kormangala Industrial Layout,
Bangalore - 560095, India
Tel: 91-80-4152-9061
sales_india@apacer.com


© 2009 Apacer Technology Inc.