MODEL AL4140

Aluminum
Full Extension
Up to 1,323-lb. [600 kg] Load Rating**
Slides Sold Individually

Applications: This slide is ideal for extra heavy-duty applications in environments subject to corrosion.

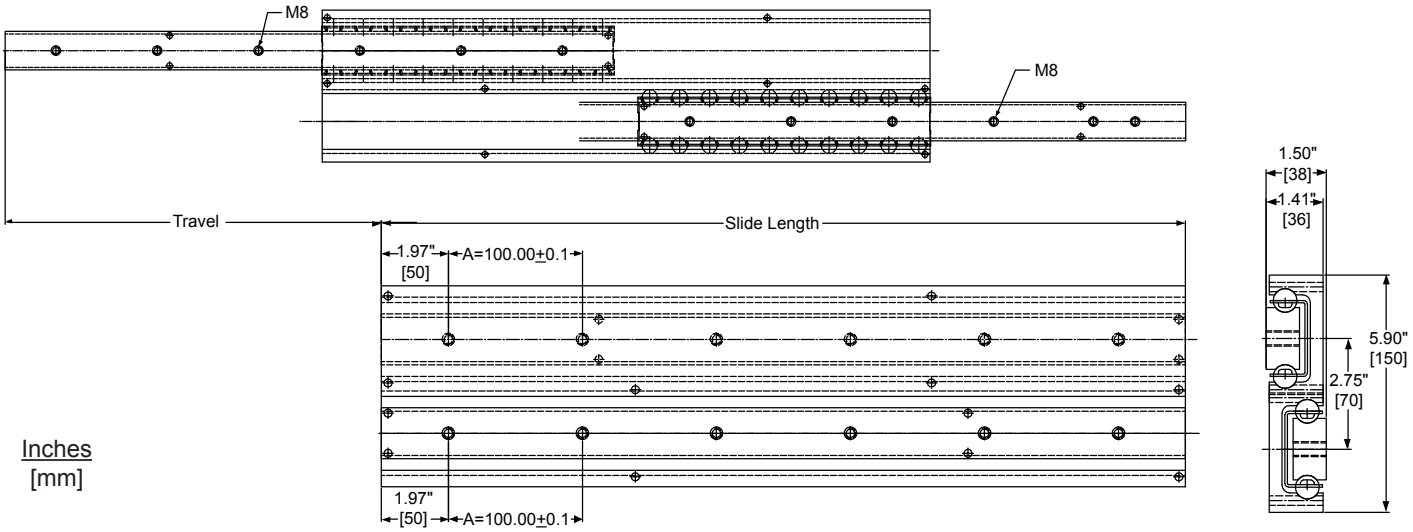

Inches
[mm]

Finish: Aluminum (RoHS compliant)

Lengths: 16", 20", 24", 28", 32", 36", 40", 44", and 48" [400 mm, 500 mm, 600 mm, 700 mm, 800 mm, 900 mm, 1000 mm, 1100 mm and 1200 mm] ***

Travel: Full Extension

Height: 5.90" [150 mm]

Load Rating: Moderate use: Up to 882 lbs. [400 kg]*
Light use: Up to 1,323 lbs. [600 kg]**

Side Space: 1.50" [38 mm]

Mounting: Side mount/Hard mount

Hardware: M8 screw (Not included)

Part Number	Slide Length	Travel	A
AL4140-16	15.75 [400]	15.82 [402]	3 X
AL4140-20	19.68 [500]	21.38 [543]	4 X
AL4140-24	23.62 [600]	24.60 [625]	5 X
AL4140-28	27.56 [700]	27.83 [707]	6 X
AL4140-32	31.50 [800]	33.39 [848]	7 X
AL4140-36	35.43 [900]	36.61 [930]	8 X
AL4140-40	39.38 [1000]	39.84 [1012]	9 X
AL4140-44	43.30 [1100]	45.40 [1153]	10 X
AL4140-48	47.24 [1200]	48.62 [1235]	11 X

* Load rating based on a pair of slides mounted 24" apart and tested to 10,000 cycles. **Load rating based on a pair of slides mounted 24" apart and tested to 5,000 cycles.

*** The lengths indicated in inches are approximate conversions from the metric measurements. Please see chart above for exact dimensions.

Installation Instructions

Important: Accuride recommends first pre-drilling all mounting holes. Align the slide as described below to pre-drill.

1. Position the outer member flush to the cabinet or rack opening. Mount the slide member (Figure 1 and Figure 2) to the cabinet or rack using M8 screws (not included). Screws are inserted through the cabinet or rack side wall and into the threaded holes on the slide. Be sure slides are parallel.
2. Position the inner member flush to the front of the drawer or chassis. Mount the inner member using M8 screws. Screws are inserted through the drawer/chassis and into the inner member's threaded holes (Figure 3).
3. Check slide alignment by opening and closing the drawer/chassis. Any sign of binding indicates an issue with side space, alignment, or the cabinet and/or drawer are out of square. To adjust alignment, loosen the screws and adjust the slide position until movement is smooth. Retighten screws.
4. Add screws to remaining holes. **All fixing positions must be used to achieve maximum load rating.** To ensure proper slide operation, all mounting screws must be inserted so that the screws do not interfere with slide movement. Use M8 screws.

Note: End stop testing is 10 cycles with a load of 882 lbs. [400 kg] at 2.62 f/s [.8 m/s]. Accuride recommends additional external stops be put into place.

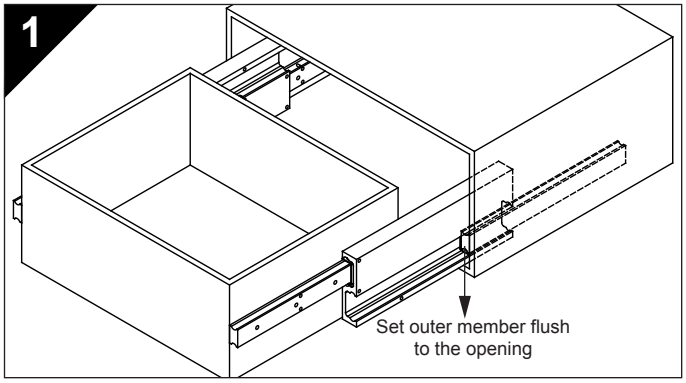

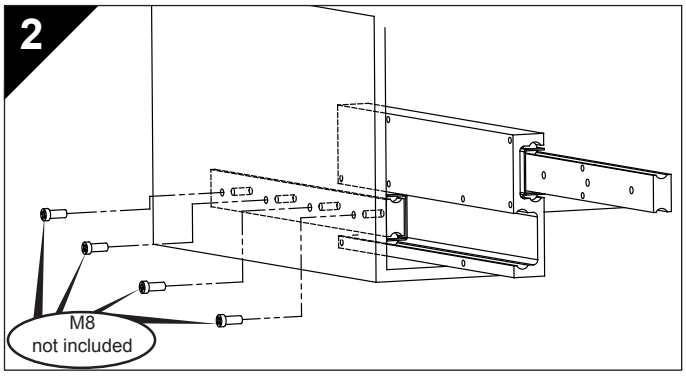

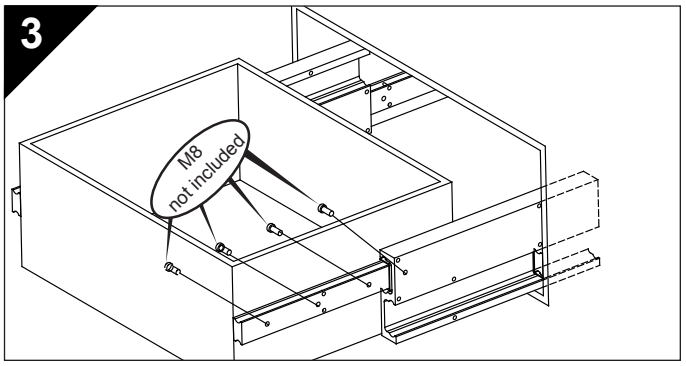

For the most current technical information please visit www.accuride.com.

Packaging

Bulk Pack: All Lengths are packaged one slide per box. Packaging includes one slide and a technical sheet. **Fasteners are not included.**

Specifications

Slide Members: Aluminum
Ball Retainers: Stainless Steel
Ball Bearings: Stainless Steel
Aluminum finish is RoHS compliant

NOTE: Specifications, materials, prices, terms, and delivery are subject to change without notice.

Slide Ordering Instructions

Complete your slide order for model AL4140 by specifying the following information:

1 Slide AL 4140 -16

Total Slides Required
Slide Finish
Slide Model
Slide Length
(Fasteners are **not** included)

Accuride
ACCURIDE INTERNATIONAL INC.
12311 Shoemaker Avenue
Santa Fe Springs, CA 90670
TEL (562) 903-0200
FAX (562) 903-0208
www.accuride.com
Manufacturing, Engineering, and Sales
United States • Germany • Japan • Mexico • United Kingdom • China

Copyright © 2007 Accuride International Inc. 3700-9516(1195)-MK109-R1-0812-W