CONTINUOUS HINGE WITH CLAMPS, TYPE 4X



INDUSTRY STANDARDS

UL 508A Listed; Type 3R, 4, 4X, 12; File No. E61997
cUL Listed per CSA C22.2 No 94; Type 3R, 4, 4X, 12; File No. E61997

NEMA/EEMAC Type 3R, 4, 4X, 12, 13
CSA File No. 42186: Type 4, 4X, 12
IEC 60529, IP66
Meets NEMA Type 3RX requirements

APPLICATION

Lightweight enclosure protects components and controls in corrosive indoor or outdoor environments such as traffic, outside plant, telecommunications and marine environments.

SPECIFICATIONS

- Type 5052 H-32 aluminum
- Seams continuously welded and ground smooth
- Rolled lip around three sides of door and all sides of enclosure opening
- Stainless steel door clamp assemblies
- Door is easily removed by pulling stainless steel continuous hinge pin
- Data pocket is high-impact thermoplastic
- Hasp and staple for padlocking
- Panel screws are plated
- Tapped pads provided for mounting optional panels
- Oil-resistant gasket

FINISH

Enclosures are unpainted. Door fronts have smooth brushed finish.

ACCESSORIES

See also Accessories.
Fast-Operating Clamp Assembly
Panels for Type 3R, 4, 4X, 12 and 13 Enclosures
Rack Mounting Angle Kit - L Style
Junction Box and Wall-Mount Enclosure Swing-Out Panel Kit
Terminal Block Kit Assembly for Type 4, 12 and 13 Enclosures
Steel and Stainless Steel Window Kits

MODIFICATION AND CUSTOMIZATION

Hoffman excels at modifying and customizing products to your specifications. Contact your local Hoffman sales office or distributor for complete information.

BULLETIN: A4A

Standard Product

Catalog Number	AxBxC in./mm	Aluminum Panel	Steel Panel	Conductive Panel	Panel Size D x E in./mm	Number of Panel Mounting Studs	F in./mm	Number of Clamps	Data Pocket Size in./mm
A16H1206ALLP	16.00 x 12.00 x 6.00 406 x 305 x 152	A16P12AL	A16P12	A16P12G	13.00 x 9.00 330 x 229	4	1.25 32	4	6.00 x 6.00 152 x 152
A20H1606ALLP	20.00 x 16.00 x 6.00 508 x 406 x 152	A20P16AL	A20P16	A20P16G	17.00 x 13.00 432 x 330	4	3.00 76	4	6.00 x 6.00 152 x 152
A20H2006ALLP	20.00 x 20.00 x 6.00 508 x 508 x 152	A20P20AL	A20P20	A20P20G	17.00 x 17.00 432 x 432	4	3.00 76	4	6.00 x 6.00 152 x 152
A24H2006ALLP	24.00 x 20.00 x 6.00 610 x 508 x 152	A24P20AL	A24P20	A24P20G	21.00 x 17.00 533 x 432	4	3.00 76	5	6.00 x 6.00 152 x 152
A16H1608ALLP	16.00 x 16.00 x 8.00 406 x 406 x 203	A16P16AL	A16P16	A16P16G	13.00 x 13.00 330 x 330	4	3.00 76	4	6.00 x 6.00 152 x 152
A24H2408ALLP	24.00 x 24.00 x 8.00 610 x 610 x 203	A24P24AL	A24P24	A24P24G	21.00 x 21.00 533 x 533	4	3.00 76	5	6.00 x 6.00 152 x 152
A30H2408ALLP	30.00 x 24.00 x 8.00 762 x 610 x 203	A30P24AL	A30P24	A30P24G	27.00 x 21.00 686 x 533	6	3.00 76	5	12.00 x 12.00 305 x 305
A36H2408ALLP	36.00 x 24.00 x 8.00 914 x 610 x 203	A36P24AL	A36P24	A36P24G	33.00 x 21.00 838 x 533	6	3.00 76	5	12.00 x 12.00 305 x 305
A36H3008ALLP	36.00 x 30.00 x 8.00 914 x 762 x 203	A36P30AL	A36P30	A36P30G	33.00 x 27.00 838 x 686	6	3.00 76	7	12.00 x 12.00 305 x 305
A48H3608ALLP	48.00 x 36.00 x 8.00 1219 x 914 x 203	A48P36AL	A48P36	A48P36G	45.00 x 33.00 1143 x 838	8	3.00 76	8	12.00 x 12.00 305 x 305
A20H1610ALLP	20.00 x 16.00 x 10.00 508 x 406 x 254	A20P16AL	A20P16	A20P16G	17.00 x 13.00 432 x 330	4	3.00 76	4	12.00 x 12.00 305 x 305
A24H2010ALLP	24.00 x 20.00 x 10.00 610 x 508 x 254	A24P20AL	A24P20	A24P20G	21.00 x 17.00 533 x 432	4	3.00 76	5	12.00 x 12.00 305 x 305
A30H2412ALLP	30.00 x 24.00 x 12.00 762 x 610 x 305	A30P24AL	A30P24	A30P24G	27.00 x 21.00 686 x 533	6	3.00 76	5	12.00 x 12.00 305 x 305
A36H3012ALLP	36.00 x 30.00 x 12.00 914 x 762 x 305	A36P30AL	A36P30	A36P30G	33.00 x 27.00 838 x 686	6	3.00 76	7	12.00 x 12.00 305 x 305
A60H3612ALLP	60.00 x 36.00 x 12.00 1524 x 914 x 305	A60P36AL	A60P36	A60P36G	57.00 x 33.00 1448 x 838	8	3.00 76	9	12.00 x 12.00 305 x 305

Purchase panels separately.

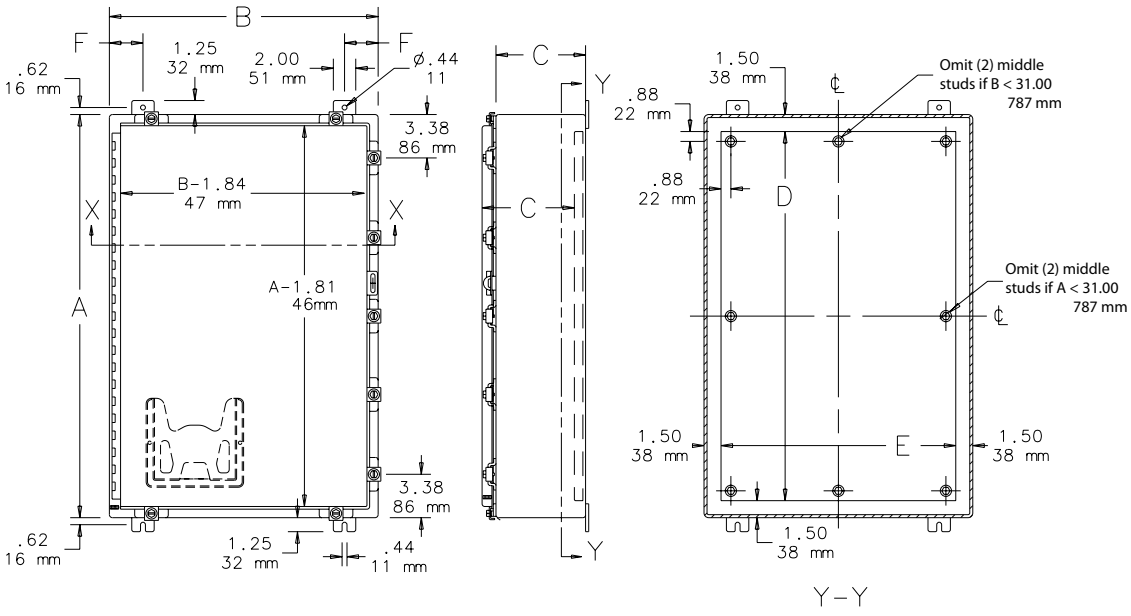
B
F
1.25
32 mm
2.00
51 mm
F
Ø.44
11
.62
16 mm
3.38
86 mm
B-1.84
47 mm
X
X
A
A-1.81
46mm
3.38
86 mm
.62
16 mm
1.25
32 mm
.44
11 mm
C
Y
C
Y
1.50
38 mm
Omit (2) middle
studs if B < 31.00
787 mm
.88
22 mm
.88
22 mm
D
Omit (2) middle
studs if A < 31.00
787 mm
1.50
38 mm
E
1.50
38 mm
1.50
38 mm
Y–Y

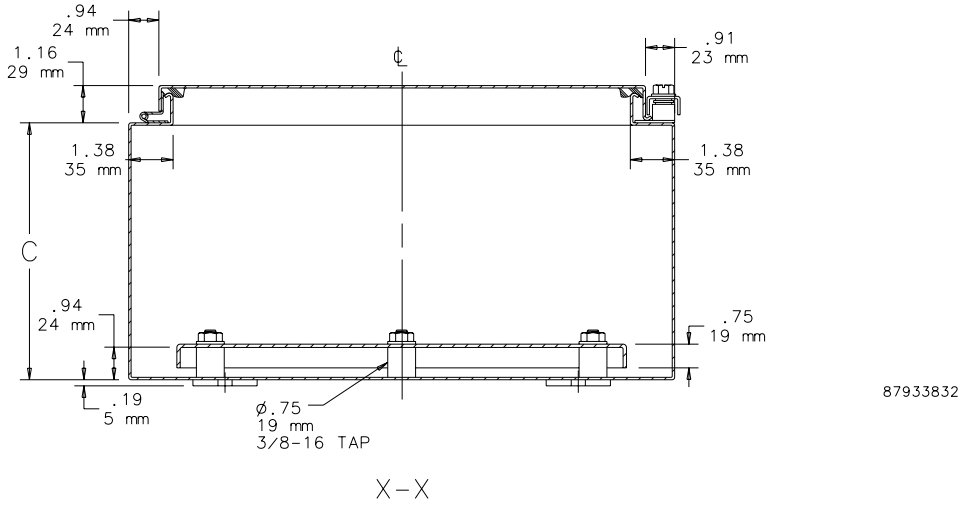
.94
24 mm
1.16
29 mm
.91
23 mm
1.38
35 mm
1.38
35 mm
C
.94
24 mm
.75
19 mm
.19
5 mm
Ø.75
19 mm
3/8-16 TAP
87933832
X–X