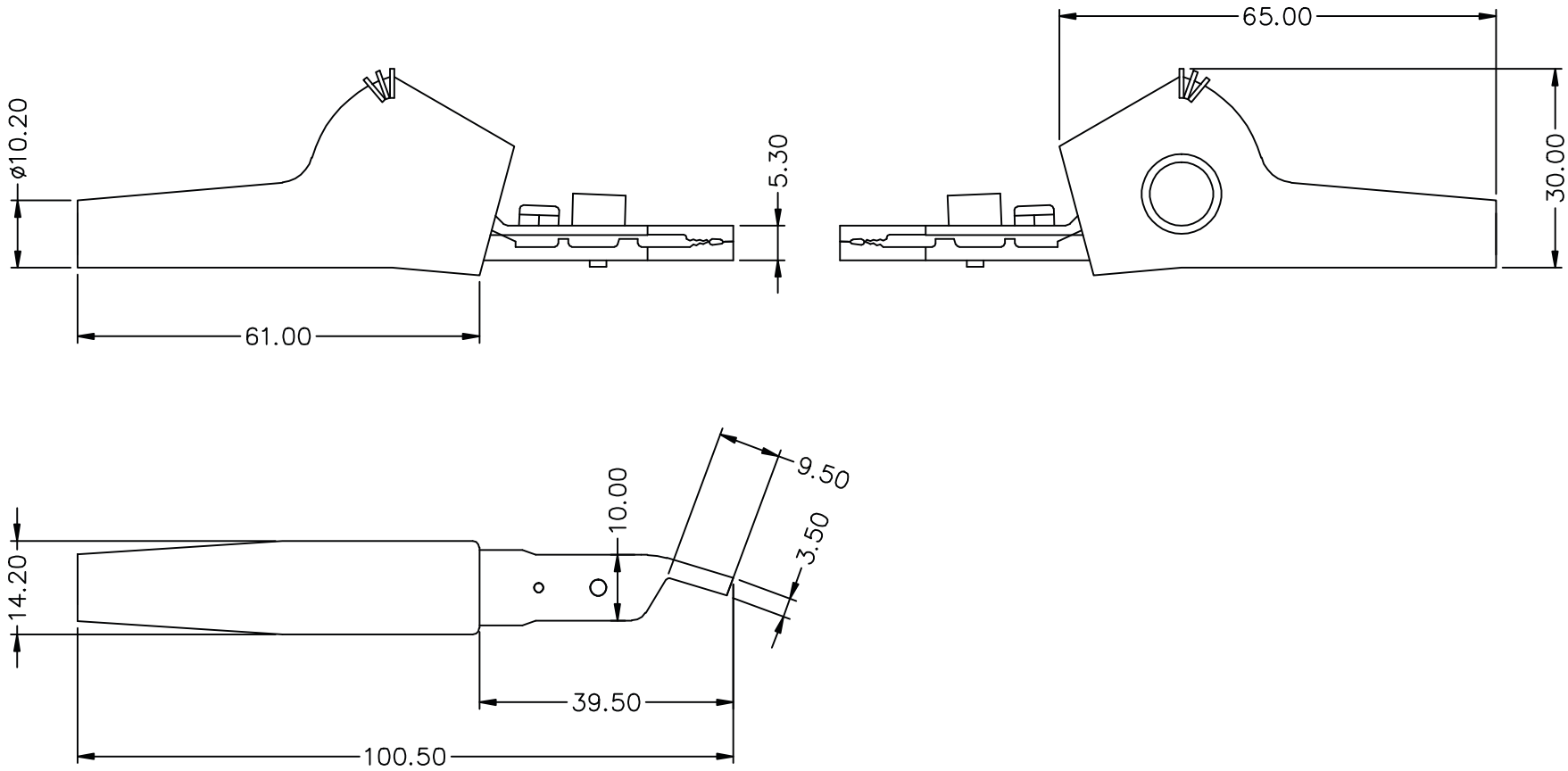

2				SCALE	N:S				
1				UNIT	mm			SHEET SIZE	297x210-H
NO	DATE	REVISION	SINE	3 rd		ORDER NAME			
DESIGN		CHECKED	APP'D	DRAW NAME		Bent Bed Of Nails Clip			
Myung		w.c.Jung	h.s.Won			MODEL: A033			
Test Products International, Inc.				DRAW NO		SMT-16-0826-02			