EVERYTHING SNAPS INTO PLACE



THE PRODUCT

The EURO CASE is extremely assembly-friendly. The case shells, side panels and snap-in panels all have a strong clip together mechanizm, without a single screw.

It is possible to customise the EURO CASE to your own corporate appearance by selecting the side panels and snap-in panels in your company's colors.

YOUR ADVANTAGE

Minimum amount of assembly required thanks to the special OKW snap-lock mechanizm.

Injection-molded reinforcing ribs ensure that these conveniently light cases have a high degree of torsional resistance and rigidity.

Variable case heights for individual installation configuration – depending on space requirements.

Any problems in ventilation are solved by snap-in panels with ventilation slots.







APPLICATIONS

Peripheral equipment for computers.
Feedback control.

Medical devices.

PROTECTION CLASS < IP 40



Complete enclosures
Off-white, RAL 9002

Side panels, handle bar and tilt foot optionally in
Pebble gray, RAL 7032

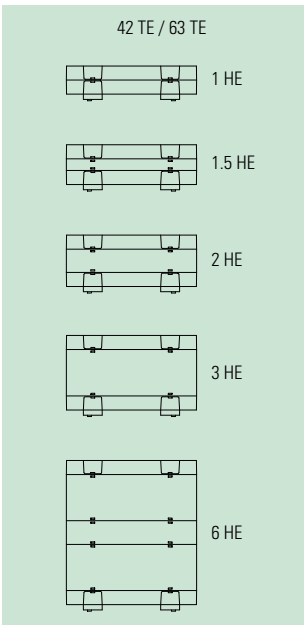

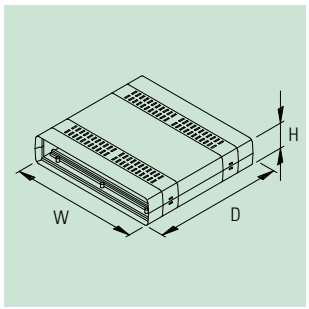

MAX. SIZE OF PCB

EURO CASE	W x D in inches case shell
42 TE	9.567 x 8.661
63 TE	13.780 x 8.661

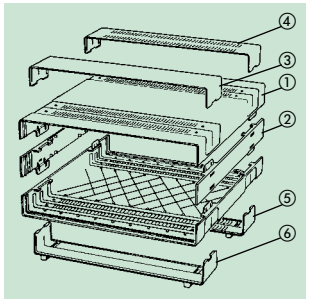

SEPARATE PARTS

① Case shell
② Side panel
③ Snap-in panel without slots
④ Snap-in panel with slots
⑤ Snap-in panel with slots, with feet
⑥ Snap-in panel without slots, with feet

Subject to technical modification without notice. Typographical and other errors do not justify any claim for damages.
Stand: 10/09 usa Copyright © 2009 OKW Gehäusesysteme

COMPLETE ENCLOSURES*1

Height-unit	Version ventilation*2	Material Color	Part-No. EURO CASE 42 TE width = 10.236", depth = 9.843" height	without handle	with handle	Part-No. EURO CASE 63 TE width = 14.449", depth = 9.843" height	without handle	with handle
1 HE	☐	ABS, off-white	2.126"	A 02 14 070	–	2.126"	A 02 16 070	–
	▭	ABS, off-white	2.126"	A 02 14 170	–	2.126"	A 02 16 170	–
	▤	ABS, off-white	2.126"	A 02 14 270	–	2.126"	A 02 16 270	–
2 HE	☐	ABS, off-white	3.878"	A 02 24 070	A 02 24 470	3.878"	A 02 26 070	A 02 26 470
	▭	ABS, off-white	3.878"	A 02 24 170	A 02 24 570	3.878"	A 02 26 170	A 02 26 570
	▤	ABS, off-white	3.878"	A 02 24 270	A 02 24 670	3.878"	A 02 26 270	A 02 26 670
3 HE	☐	ABS, off-white	5.630"	A 02 34 070	A 02 34 470	5.630"	A 02 36 070	A 02 36 470
	▭	ABS, off-white	5.630"	A 02 34 170	A 02 34 570	5.630"	A 02 36 170	A 02 36 570
	▤	ABS, off-white	5.630"	A 02 34 270	A 02 34 670	5.630"	A 02 36 270	A 02 36 670
6 HE	☐	ABS, off-white				10.89"	A 02 66 070	–
	▭	ABS, off-white				10.89"	A 02 66 170	–
	▤	ABS, off-white				10.89"	A 02 66 270	–

SEPARATE PARTS (FOR INDIVIDUAL COMBINATIONS)

Article supply each 1 pc	Part-No. 42 TE off-white	42 TE pebble gray	Part-No. 63 TE off-white	63 TE pebble gray
① Case shell, ABS	A 01 14 170	–	A 01 16 170	–
② Side panel 0.5 HE, ABS	A 01 05 270	A 01 05 280	A 01 05 270	A 01 05 280
② Side panel 1 HE, ABS	A 01 10 270	A 01 10 280	A 01 10 270	A 01 10 280
② Side panel 2 HE, ABS	A 01 20 270	A 01 20 280	A 01 20 270	A 01 20 280
② Side panel 0.5 HE for handle mounting, ABS	A 01 06 270	A 01 06 280	A 01 06 270	A 01 06 280
② Side panel 1 HE for handle mounting, ABS	A 01 11 270	A 01 11 280	A 01 11 270	A 01 11 280
② Side panel 2 HE for handle mounting, ABS	A 01 21 270	A 01 21 280	A 01 21 270	A 01 21 280
③ Snap-in panel without slots, ABS	A 01 14 370	–	A 01 16 370	–
④ Snap-in panel with slots, ABS	A 01 24 370	–	A 01 26 370	–
⑥ Snap-in panel without slots, with feet, ABS	A 01 34 370	–	A 01 36 370	–
⑤ Snap-in panel with slots, with feet, ABS	A 01 44 370	–	A 01 46 370	–
Handle bar*3, off-white, push-button off-white	A 03 44 217		A 03 46 317	
Handle bar*3, pebble gray, push-button off-white	A 03 44 218		A 03 46 318	
Handle bar*3, off-white, push-button pebble gray	A 03 44 216		A 03 46 316	
Tilt foot, ABS, off-white, snaps into the feet section	A 03 50 007		A 03 50 007	

ACCESSORIES

Article supply each 1 pc	Part-No. for EURO CASE 42 TE		Part-No. for EURO CASE 63 TE	
Front / rear panel, matt anodized Al, R0.236" 1 HE	9.87 x 1.82 x 0.08"	A 03 14 270	14.09 x 1.82 x 0.08"	A 03 16 370
Front / rear panel, matt anodized Al, R0.236" 1.5 HE	9.87 x 2.70 x 0.08"	A 03 54 270	–	–
Front / rear panel, matt anodized Al, R0.236" 2 HE	9.87 x 3.57 x 0.08"	A 03 24 270	14.09 x 3.57 x 0.08"	A 03 26 370
Front / rear panel, matt anodized Al, R0.236" 3 HE	9.87 x 5.32 x 0.08"	A 03 34 270	14.09 x 5.32 x 0.08"	A 03 36 370
Front / rear panel, matt anodized Al, R0.236" 6 HE	–	–	14.09x10.57x0.08"	A 03 66 370

*1 front / rear panel and tilt feet must be ordered separately

*2 ventilation provided with each enclosure (snap-in panel at the base additionally with foot):

☐ version without ventilation slots

▭ version with ventilation slots at rear, top and base

▤ version with ventilation slots at front and rear, top and base

*3 the adjustment mechanizm allows increments of 30°; load capacity see Info-Box page 109, illustration no. ②

To achieve one EURO CASE from separate parts, for a special combination, please order:
2 case shells
4 snap-in panels
2 side panels (if needed)
1 handle bar (if needed)
2 tilt feet (if needed)
2 front / rear panels (if needed)