# KM6-II Subracks: Standard and Universal



KM6-II subracks are strong, versatile units ideally suited to a wide variety of applications. Designed around IEC 297-3 and the Eurocard standard – DIN41494 – they offer a high degree of interchangeability between different versions. Benefiting from a simple, yet incredibly accurate, method of assembly, they offer a means of housing cards of different sizes, in a variety of configurations – even mixing differing heights within the same subrack.

Supported by an extensive range of accessories, EMC conversion products, front panels and plug-in units in two and four rail formats, the KM6-II range provides the perfect platform for electronic systems.

# Dimensional Criteria: KM6-II Subrack Systems

### *UNIVERSAL SUBRACK LAYOUT*

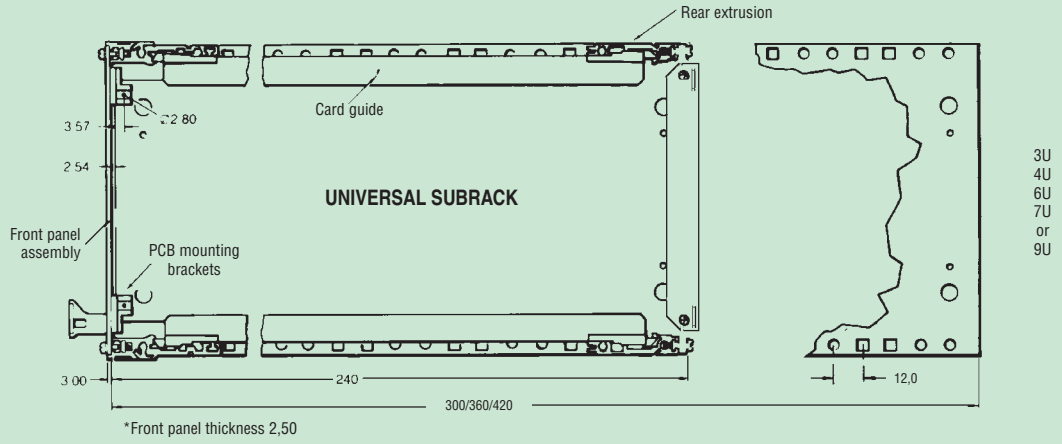


### *STANDARD SUBRACK LAYOUT*

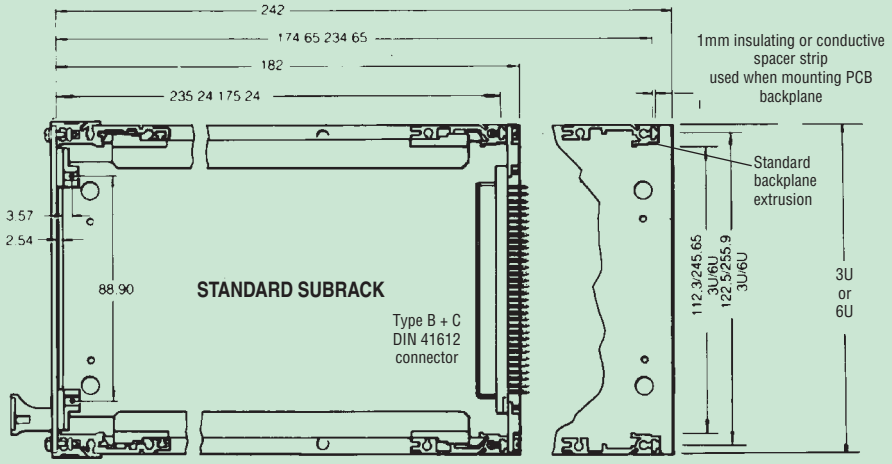


### *3U SUBRACK FRONT VIEW*

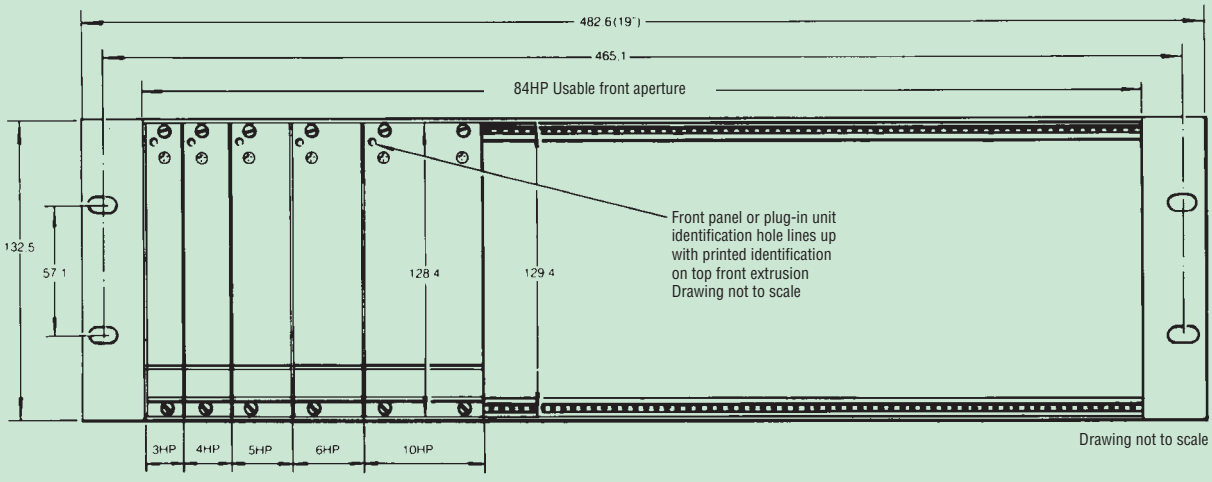

# KM6-II Subracks: Standard

KM6-II 'Standard' Subracks are strong and versatile, whilst offering ease of assembly. The tie bars are of a larger section to improve both rigidity and guide location, and versions suitable for 220mm boards will accept 160mm boards. The end plates are symmetrical in design, allowing 19" end plate angles to be fitted on either the front or rear of the frame, thus providing easy rear access.

**Features**

- Versions for backplane and DIN 41612 connector
- Strong and versatile
- Conforms to IEC 60297-3
- Totally conductive components
- 160mm mounting in 220mm versions
- Provision for fitting 19" angles front or rear
- 3U and 6U heights
- 160 and 220mm board compatible
- 84 and 42 HP widths available
- Simple assembly - single screw fixing of tie-bars
- No adjustment required after assembly
- Pre-tapped holes and machine screws throughout
- Supplied as a complete kit
- Reduced height end plates to accept chassis supports
- Available with or without front handles

'Standard' subracks can be supplied with backplane or DIN 41612 connector mounting rear extrusion. 84HP kits are available with, or without, front handles. Backplane extrusions can be converted to DIN 41612 by means of a separate connector frame.

The kit includes rear tie bars and is complete with all tapped strips. In order to maintain the front panel/connector geometry a suitable backplane spacer, either insulating or conductive, must be used on backplane versions.

**Contents of kit**

| Description | Qty. | Material/Finish |
|---|---|---|
| End plates | 2 | 2mm aluminium BS 1470 5251-H24 (NS4 H6), conductive clear chromate |
| End plate angles | 2 | Aluminium Ally BS1474-6063-T6 anodised |
| Front tie bars | 2 | Aluminium alloy BS 1474 6063T6, conductive clear chromate |
| Rear tie bars | 2 | Aluminium alloy BS 1474 6063T6, conductive clear chromate |
| Centre rear tie bar (6U only) | 1 | Aluminium alloy BS 1474 6063T6, conductive clear chromate |
| Tapped strips | | MS Zinc passivate |
| Backplane variants (3U/6U) | 4/6 | |
| DIN 41612 variants | 2 | |
| (the rear extrusions are fully tapped) | | |
| All fixings | | |
| Assembly instructions | | |
| Optional: handles | 2 | |

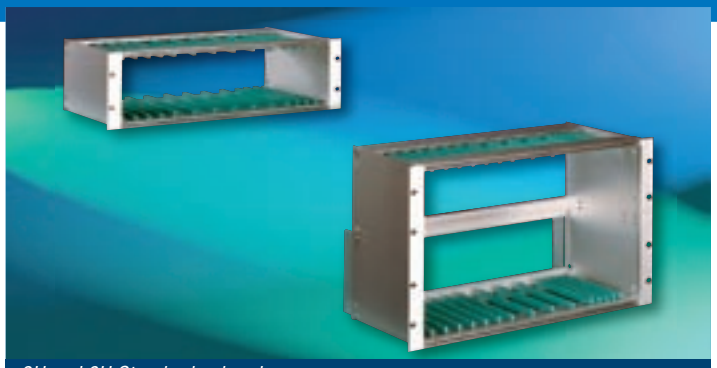

*3U and 6U Standard subracks*

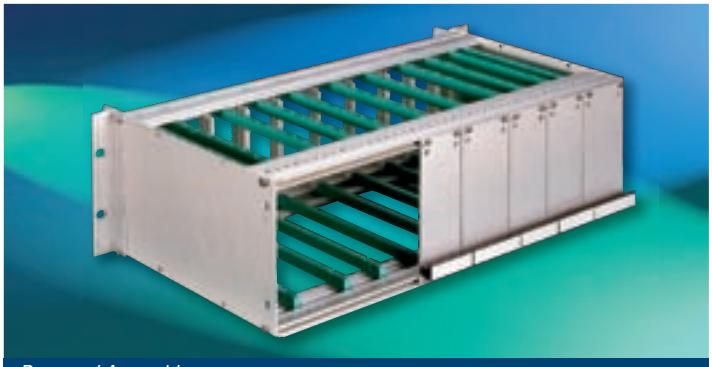

*Reversed Assembly*

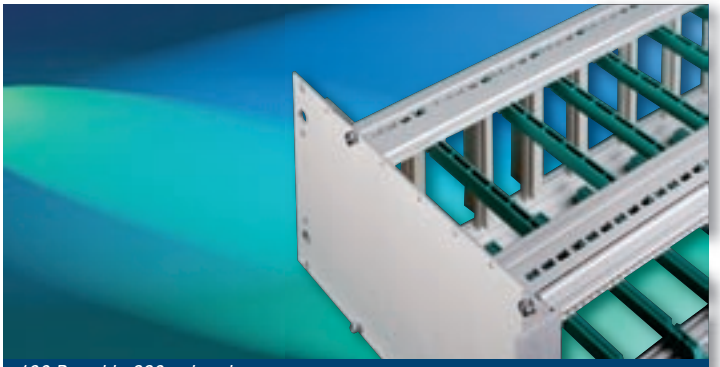

*160 Board in 220 subrack*

*Backplane Extrusions*

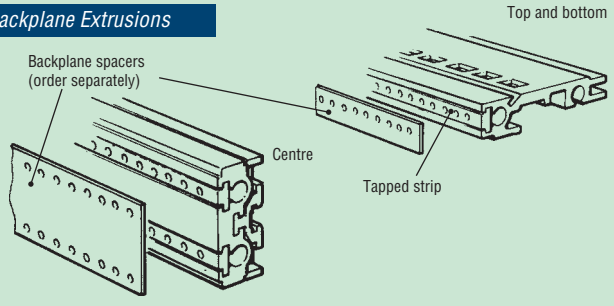


*DIN 41612 Extrusions*

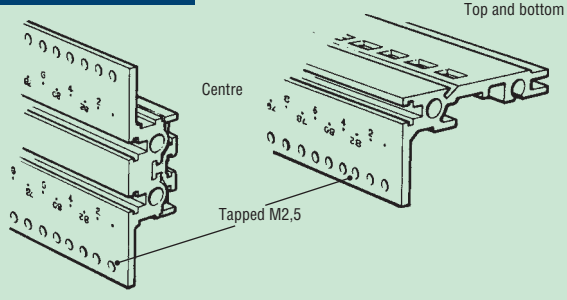

# KM6-II Subracks: Standard

### *KM6-II SUBRACK, BACKPLANE MOUNTING*

**Ordering information**

| Height | Depth (mm) | Width (HP) | Order code without handles | Order code with handles |
|---|---|---|---|---|
| 3U | 180 | 42 | **950-202583A** | – |
| | 240 | 42 | **950-202587D** | – |
| | 180 | 84 | **950-202581E** | **950-232563L** |
| | 240 | 84 | **950-202585H** | **950-232654J** |
| 6U | 180 | 42 | **950-202584K** | – |
| | 240 | 42 | **950-202588B** | – |
| | 180 | 84 | **950-202582C** | **950-232604A** |
| | 240 | 84 | **950-202586F** | **950-232605K** |

*Notes:*

1. *In order to maintain the correct geometry between the front panels and backplane connectors a suitable backplane spacer is required. Either insulating or conductive types (1mm thick) may be used, and must be located between the rear tie bar and the backplane - refer to page 31.*
2. *Backplane mounting tie bars can be converted to accept DIN 41612 connectors by fitting adaptor kits or rails - refer to page 31.*

### *KM6-II SUBRACK, DIN 41612 CONNECTOR MOUNTING*

**Ordering information**

| Height | Depth (mm) | Width (HP) | Order code without handles | Order code with handles |
|---|---|---|---|---|
| 3U | 180 | 84 | **950-232050G** | **950-232568A** |
| | 240 | 84 | **950-232051E** | **950-232569K** |
| 6U | 180 | 84 | **950-232052C** | **950-232607F** |
| | 240 | 84 | **950-232053A** | **950-232608D** |

**Order separately**


| Product | Page |
|---|---|
| DIN 41612 Connector Adaptor kits | 31 |
| Backplane Spacers | 31 |
| PCB or Plug-in Unit Guides | 32 |
| PCB Grounding clip | 33 |
| PCB Retainers and guide nose extensions | 34 |
| PCB Ejectors | 35 |
| Divider kits | 38 –40 |
| Rear Dust Covers | 41 |
| Top, Bottom and Rear Covers – non-EMC | 41 |
| Horizontal PCB Mounting Modules | 42 |
| Subrack Handles | 43 |
| Connector Protection Kits | 44 |
| Fixing Screws | 45 |
| Front Panels and Plug-in Units | 50 – 77 |


*Note: The conductive finish gives excellent electrical conductivity but is more easily marked than anodising. During assembly care should therefore be taken to avoid the deposition of grease and oil, particularly on the visible surfaces.*

*3U Subrack*

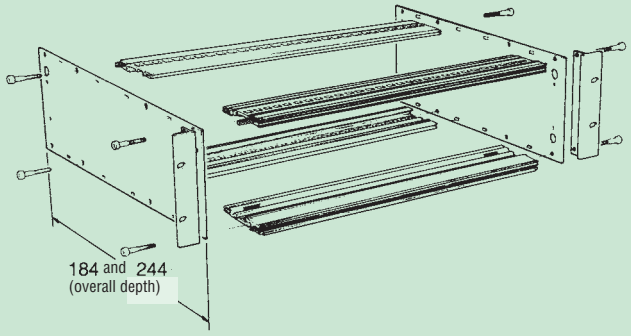


*6U Subrack*

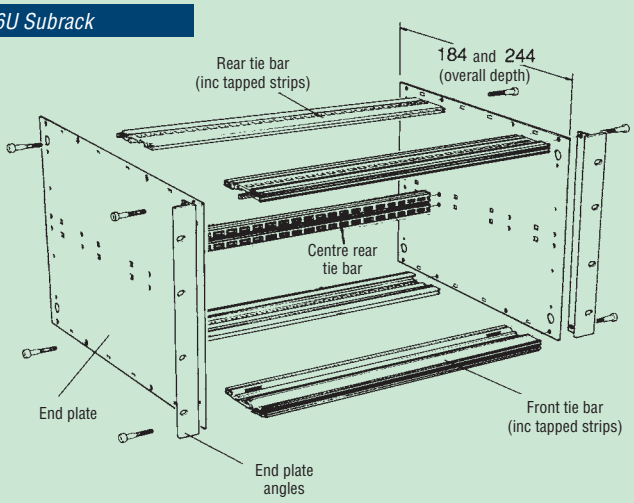


*Dimensional Detail*

***FRONT VIEW***

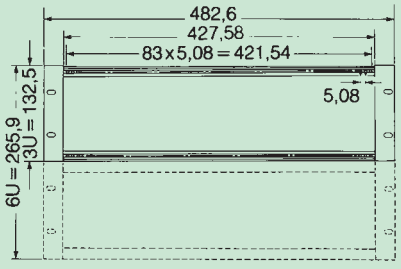


***SIDE VIEW***

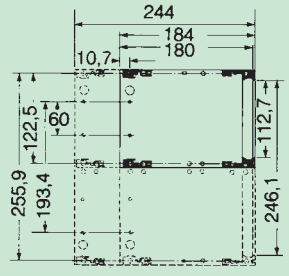


***PLAN VIEW***

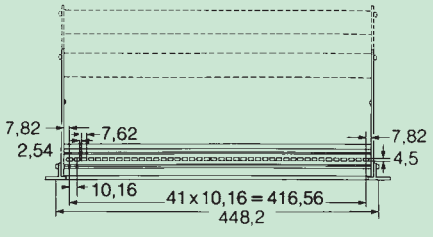

# KM6-II Subracks: Universal

Universal KM6-II subracks are strong, versatile and easy to assemble. The tie bars are of large section for rigidity and are secured using two fixing screws into counterbored holes. The screws thus act as location dowels promoting a high degree of accuracy during construction.

**Features**

- Strong and versatile
- Two screw fixing of tie bars
- Conforms to IEC 60297-3
- Total versatility permits wide range of configurations
- Available in kit or piece-part form
- Accurate location for first time assembly
- Rugged construction
- Pre-tapped holes and machine screws throughout
- EMC conversion (see pages 18 – 23)
- No location mouldings required
- With or without front handles
- Provision for fitting 19" angles front or rear

This version, as the name implies, has the capability of housing Eurocards of different sizes in a variety of configurations.
The frame can be constructed from standard parts in 3U, 4U, 6U, 7U and 9U heights.

The 240mm, 300mm, 360mm or 420mm deep endplates, incorporate a series of punched holes so that the tie bars can be assembled at any required position on a 12mm pitch. 300mm and greater depths also have a pattern of additional holes for fixing the chassis system. 84 HP variants are offered in Backplane or DIN 41612 connector mounting and are supplied with or without front handles. DIN 41612 rear tie bars are fully tapped.

*Note: 4U and 7U versions can only be ordered from piece parts. Alternative versions of 3U, 6U and 9U subracks can also be ordered from piece parts.*

**Contents of kits**

| Description | Qty. | Material/Finish |
|---|---|---|
| End plates | 2 | 2mm or 2,5mm aluminium BS 1470 5251- H24 (NS4 H6) conductive clear chromate |
| End plate angles | 2 | Aluminimum alloy BS1474-6063-T6 anodised |
| Front tie bars | 2 | Aluminium alloy BS 1474-6063-T6 conductive clear chromate |
| Rear tie bars - | 2 - 3U<br>3 - 6U<br>4 - 9U | Aluminium alloy BS 1474-6063-T6 conductive clear chromate |
| Tapped strips | | |
| Backplane variants- | 4 - 3U<br>6 - 6U<br>8 - 9U | MS zinc passivate<br>MS zinc passivate<br>MS zinc passivate |
| DIN 41612 variants (the rear extrusions are fully tapped) | 2 | Aluminium alloy BS 1474 6063T6 conductive clear chromate |
| All fixings | | |
| Assembly instructions | 1 | |
| Optional: handles | 2 | |



*3U and 6U Universal subracks*

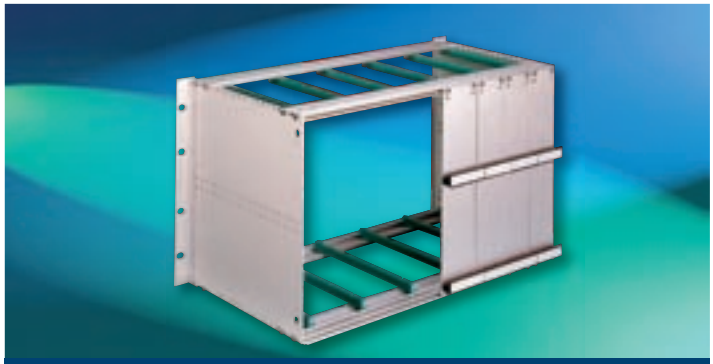

*Reversed Subrack*



*EMC conversion*

*Backplane Extrusions*

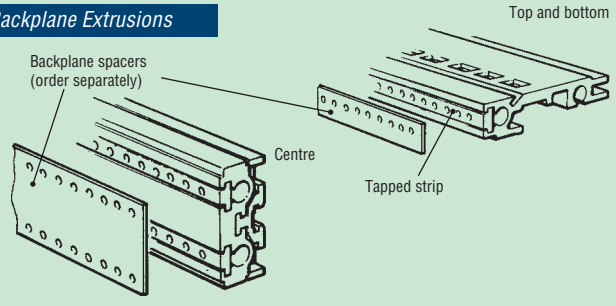


*DIN 41612 Extrusions*

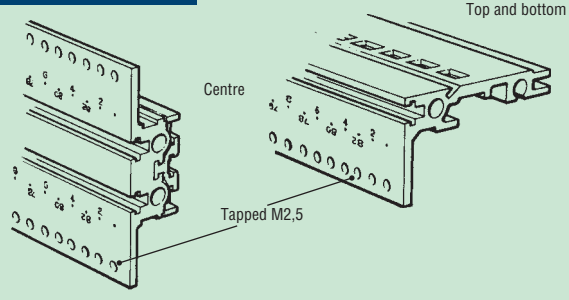

# KM6-II Subracks: Universal

### *KM6-II SUBRACK, BACKPLANE MOUNTING*

**Ordering information**

| Height | Depth (mm) | Width (HP) | Order code without handles | Order code with handles |
|---|---|---|---|---|
| 3U | 240 | 42 | **950-202592L** | **–** |
| | 240 | 84 | **950-202589L** | **950-232565G** |
| | 300 | 84 | **950-223550K** | **950-232566E** |
| | 360 | 84 | **950-202594G** | **950-232567C** |
| 6U | 240 | 42 | **950-202593J** | **–** |
| | 240 | 84 | **950-202590D** | **950-232599A** |
| | 300 | 84 | **950-223551H** | **950-232601G** |
| | 360 | 84 | **950-202595E** | **950-232602E** |
| | 420 | 84 | **950-202597A** | **950-232603C** |
| 9U | 240 | 84 | **950-202591B** | **–** |
| | 300 | 84 | **950-224198D** | **–** |
| | 360 | 84 | **950-202596C** | **–** |
| | 420 | 84 | **950-202598K** | **–** |

*Notes:*

1. *In order to maintain the correct geometry between the front panels and backplane connectors a suitable backplane spacer is required. Either insulating or conductive types (1mm thick) may be used, and must be located between the rear tie bar and the backplane - refer to page 31.*
2. *Backplane mounting tie bars can be converted to accept DIN 41612 connectors by fitting adaptor kits or rails - refer to page 31.*

### *KM6-II SUBRACK, DIN 41612 CONNECTOR MOUNTING*

**Ordering information**

| Height | Depth | Width (HP) | Order code without handles | Order code with handles |
|---|---|---|---|---|
| 3U | 240 | 84 | **950-232054K** | **950-232570C** |
| | 360 | 84 | **950-232055H** | **950-232571A** |
| 6U | 240 | 84 | **950-232056F** | **950-232609B** |
| | 360 | 84 | **950-232057D** | **950-232610F** |

**Order separately**


| Product | Page |
|---|---|
| EMC Covers/conversion kit | **18 – 20** |
| EMC Front and Rear Panels | **23** |
| Backplane spacers | **31** |
| DIN 41612 connector mounting | **31** |
| PCB or Plug-in module guides | **32** |
| PCB Grounding clips | **33** |
| Positive Guide Retention – tapped strips | **33** |
| PCB Retainers and guide nose extensions | **34** |
| PCB Ejectors | **35** |
| Divider Kits | **38 – 40** |
| Rear Dust covers – non-EMC | **41** |
| Top and Bottom covers – non-EMC | **41** |
| Horizontal mounting modules | **42** |
| Subrack handles | **43** |
| Connector protection kits | **44** |
| Fixing screws | **45 and 75** |
| Front panels and Plug-in units | **50 – 77** |


*Note: The conductive finish gives excellent electrical conductivity but is more easily marked than anodising. During assembly care should therefore be taken to avoid the deposition of grease and oil, particularly on the visible surfaces.*

*3U Subrack*

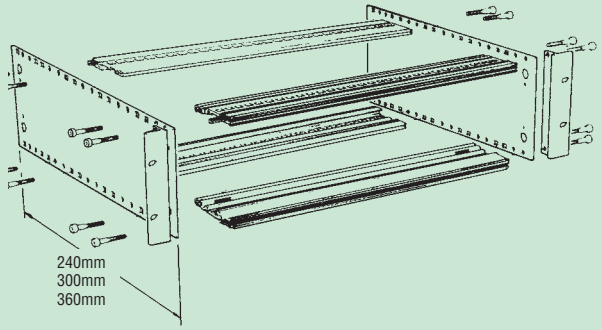


*6U Subrack*

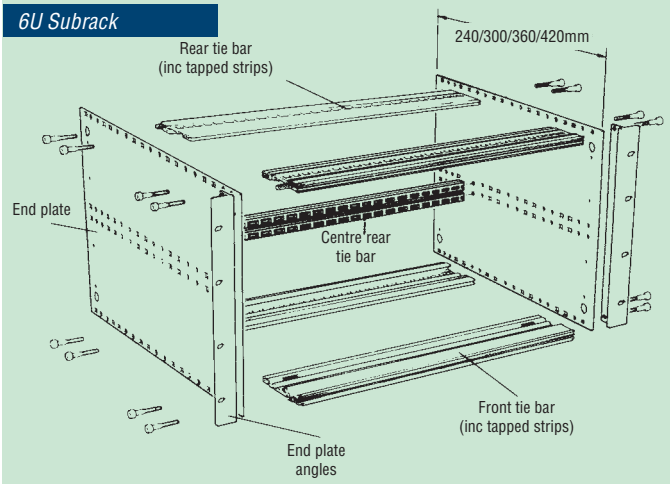


*Dimensional Detail*

***FRONT VIEW***

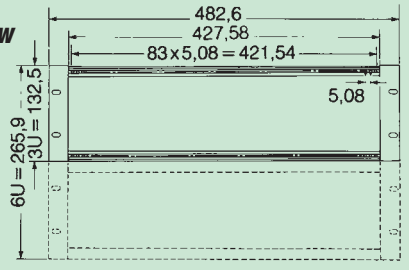


***SIDE VIEW***

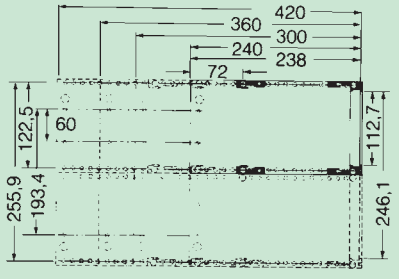


***PLAN VIEW***

