

MLN 100/2,5 rot/red

Measuring and Testing Equipment:Measuring leads:4 mm system

Product description	
Description	Measuring lead,at either end 4 mm diameter plug with caged spring and 4 mm diameter socket for tower construction. Nickel-plated copper beryllium contact spring. Highly flexible, double insulated stranded lead, grip and lead shatter-proof. Built in colour indicator for easy identifcation of insulation damages.
Type	MLN 100/2,5 rot/red
Order No.	934 063-101
System	4 mm system
Cable length	100 cm
Conductor size	2,5 mm²
Cable material	PVC
Cable color	red
Housing Color	red
Other standard types	black color, order no. 934 063-100; blue color, order no. 934 063-102; yellow color, order no. 934 063-103; green color, order no. 934 063-104; yellow/green color, order no. 934 063-188

Drawing

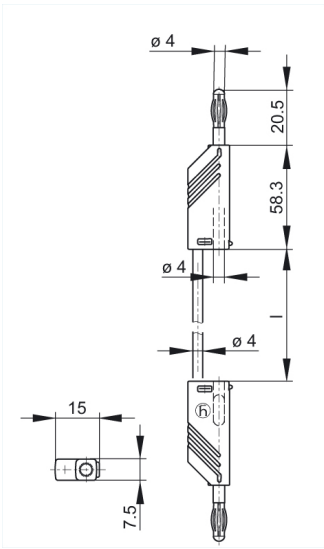

Technical data

Pin dimensions	4 mm
Type of contact	pin (spring loaded)
Type of termination	4 mm diameter pin and socket
Cable type	LEH-XY
Cable specification	highly flexible lead
Wire stranding	320 x 0,10
Rated voltage	DC 60 V
Rated current	32 A
Contact resistance	12 mOhm
Material	
Contact material	contact pin: brass, contact spring: copper beryllium
Contact surface material	nickel-plated
Housing material	PA
Environmental conditions	
Temperature range	-15 °C to +70 °C
Inflammability class	
Cable	94 HB
Housing	94 V-2