REVISIONS				
SYM	DESCRIPTION	REVISED BY	DATE	APPR

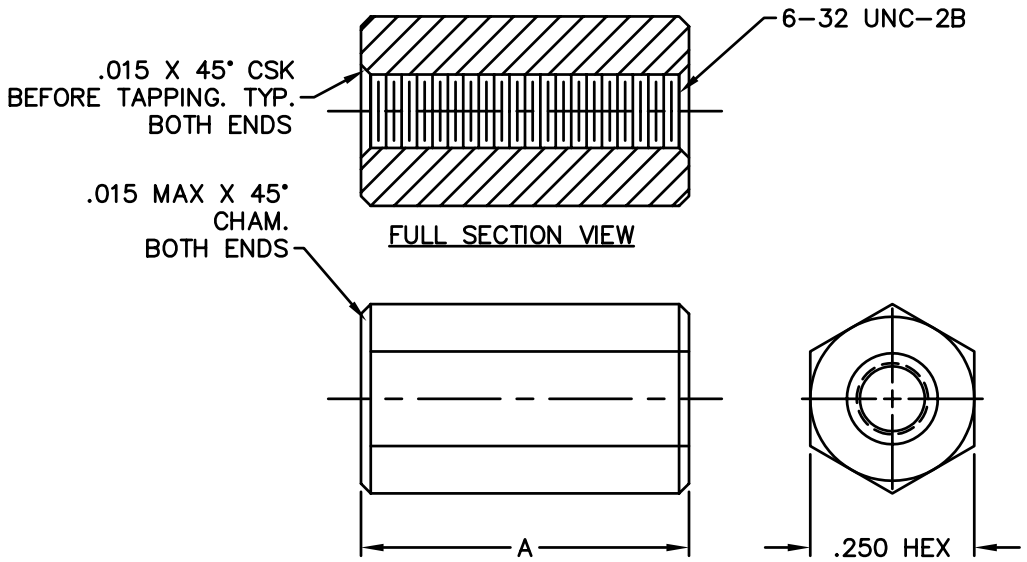

STANDOFF	
PART NO.	DIM. A
8821	.125
8824	.187
2320	.250
8827	.312
2321	.375
8830	.437
2322	.500
8833	.562
8836	.625
8839	.687
2323	.750
8842	.812
8845	.875
8848	.937
2324	1.000

MATERIAL: BRASS ALLOY, 360		FINISH: NICKEL	
DIMENSIONAL TOLERANCES UNLESS OTHERWISE SPECIFIED			TITLE: 6–32 THD BRASS HEX STANDOFF 1/4 HEX THD THRU #6–32
.XX	.XXX	.XXXX	
---	---	---	
FRACTIONS	ANGLES	SCALE	
---	---	NONE	
HEAT TREAT: ---			DRAWN: T. LORD DATE: 8/16/05
PLOT SCALE: 1=1			CHECKED: T. LORD DATE: 8/16/05
			APPROVED: T. LORD DATE: 8/16/05

ABBATRON

Electronic Connectors and Hardware

632 Arch Street, Meadville, Pa. 16335

SIZE	DRAWING NUMBER	ISSUE
B	**SMP-00443**	A