Holo-Krome®
The Difference is Easy To See
800-688-8949 • www.Holo-Krome.com • Wallingford, CT

# PRODUCT DATA SHEET



## Flat Head Socket Cap Screw

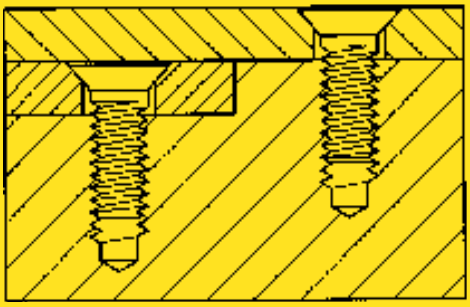

**Applications:**

- Flush mounted applications where one part slides over another
- Flat heads are limited by configuration in their tensile strength capability

**Benefits:**

- Unified standard threads are Class 3A UNRC and UNRF with Holo-Krome controlled radius roots and radius run-out
- Closely controlled fillet between head and body provides maximum fatigue strength
- Inch Series: ASME/ANSI B18.3 and ASTM F 835
- Metric Series: Reference ISO 10642

## Standard Flat Head Socket Cap Screw

| DIAMETER | LENGTH UNDER HEAD | PRODUCT CODE NUMBER UNRC | UNRF |
|---|---|---|---|
| **#4** (.112") 40 UNRC 1/16" Key | 1/4" | **60002** | - |
| | 3/8" | **60004** | - |
| | 1/2" | **60006** | - |
| | 5/8" | **60008** | - |
| | 3/4" | **60010** | - |
| **#5** (.125") 40 UNRC 5/64" Key | 1/4" | **60012** | - |
| | 3/8" | **60014** | - |
| | 1/2" | **60016** | - |
| | 5/8" | **60018** | - |
| | 3/4" | **60020** | - |
| **#6** (.138") 32 UNRC 5/64" Key | 1/4" | **60022** | - |
| | 3/8" | **60024** | - |
| | 1/2" | **60026** | - |
| | 5/8" | **60028** | - |
| | 3/4" | **60030** | - |
| **#8** (.164") 32 UNRC 3/32" Key | 3/8" | **60032** | - |
| | 1/2" | **60034** | - |
| | 5/8" | **60036** | - |
| | 3/4" | **60038** | - |
| | 1" | **60040** | - |
| **#10** (.190") 24 UNRC 32 UNRF 1/8" Key | 3/8" | **60042** | **61002** |
| | 1/2" | **60044** | **61004** |
| | 5/8" | **60046** | **61006** |
| | 3/4" | **60048** | **61008** |
| | 1" | **60050** | **61010** |
| | 1-1/4" | **60052** | **61012** |
| | 1-1/2" | **60054** | **61014** |
| **1/4"** (.250") 20 UNRC 28 UNRF 5/32" Key | 3/8" | **60056** | **61016** |
| | 1/2" | **60058** | **61018** |
| | 5/8" | **60060** | **61020** |
| | 3/4" | **60062** | **61022** |
| | 1" | **60064** | **61024** |
| | 1-1/4" | **60066** | **61026** |
| | 1-1/2" | **60068** | **61028** |
| | 1-3/4" | **60070** | - |
| | 2" | **60072** | - |
| **5/16"** (.312") 18 UNRC 24 UNRF 3/16" Key | 1/2" | **60074** | **61030** |
| | 5/8" | **60076** | **61032** |
| | 3/4" | **60078** | **61034** |
| | 1" | **60080** | **61036** |
| | 1-1/4" | **60082** | **61038** |
| | 1-1/2" | **60084** | - |
| | 1-3/4" | **60086** | - |
| | 2" | **60088** | - |
| | 2-1/4" | **60090** | - |
| | 2-1/2" | **60092** | - |
| **3/8"** (.375") 16 UNRC 24 UNRF 7/32" Key | 5/8" | **60096** | **61040** |
| | 3/4" | **60098** | **61042** |
| **3/8"** (.375") 16 UNRC 24 UNRF 7/32" Key | 1" | **60100** | **61044** |
| | 1-1/4" | **60102** | **61046** |
| | 1-1/2" | **60104** | **61048** |
| | 1-3/4" | **60106** | - |
| | 2" | **60108** | - |
| | 2-1/4" | **60110** | - |
| | 2-1/2" | **60112** | - |
| | 3" | **60114** | - |
| **7/16"** (.437") 14 UNRC 1/4" Key | 3/4" | **60116** | - |
| | 1" | **60118** | - |
| | 1-1/4" | **60120** | - |
| | 1-1/2" | **60122** | - |
| | 3/4" | **60124** | **61050** |
| | 1" | **60126** | **61052** |
| **1/2"** (.500") 13 UNRC 20 UNRF 5/16" Key | 1-1/4" | **60128** | **61054** |
| | 1-1/2" | **60130** | **61056** |
| | 1-3/4" | **60132** | **61058** |
| | 2" | **60134** | **61060** |
| | 2-1/4" | **60136** | - |
| | 2-1/2" | **60138** | - |
| | 3" | **60140** | - |
| **5/8"** (.625") 11 UNRC 3/8" Key | 1-1/4" | **60142** | - |
| | 1-1/2" | **60144** | - |
| | 1-3/4" | **60146** | - |
| | 2" | **60148** | - |
| | 2-1/4" | **60150** | - |
| | 2-1/2" | **60152** | - |
| | 3" | **60154** | - |
| **3/4"** (.750") 10 UNRC 1/2" Key | 1-1/2" | **60158** | - |
| | 1-3/4" | **60160** | - |
| | 2" | **60162** | - |
| | 2-1/2" | **60166** | - |
| | 3" | **60168** | - |

## Metric Flat Head Socket Cap Screw

| DIAMETER | LENGTH UNDER HEAD | PRODUCT CODE NUMBER |
|---|---|---|
| **M3** Pitch 0.50 2mm Key | 6 | **87003** |
| | 8 | **87004** |
| | 10 | **87008** |
| | 12 | **87012** |
| | 16 | **87016** |
| | 20 | **87020** |
| | 25 | **87021** |
| **M4** Pitch 0.70 2.55mm Key | 8 | **87024** |
| | 10 | **87028** |
| | 12 | **87032** |
| | 16 | **87036** |
| | 20 | **87040** |
| | 25 | **87044** |
| | 30 | **87048** |
| | 35 | **87049** |
| | 40 | **87050** |
| **M5** Pitch 0.80 3mm Key | 8 | **87052** |
| | 10 | **87056** |
| | 12 | **87060** |
| | 16 | **87064** |
| | 20 | **87068** |
| | 25 | **87072** |
| | 30 | **87076** |
| | 35 | **87077** |
| | 40 | **87078** |
| | 50 | **87079** |
| **M6** Pitch 1.00 4mm Key | 10 | **87084** |
| | 12 | **87088** |
| | 16 | **87092** |
| | 20 | **87096** |
| | 25 | **87100** |
| | 30 | **87104** |
| | 35 | **87108** |
| | 40 | **87112** |
| | 45 | **87113** |
| | 50 | **87114** |
| | 60 | **87115** |
| **M8** Pitch 1.25 5mm Key | 15 | **87122** |
| | 16 | **87124** |
| | 20 | **87128** |
| | 25 | **87132** |
| | 30 | **87136** |
| | 35 | **87140** |
| | 40 | **87144** |
| | 45 | **87143** |
| | 50 | **87145** |
| | 60 | **87146** |
| | 70 | **87147** |
| **M10** Pitch 1.50 6mm Key | 15 | **87151** |
| | 16 | **87149** |
| | 20 | **87152** |
| | 25 | **87156** |
| **M10** Pitch 1.50 6mm Key | 30 | **87160** |
| | 35 | **87164** |
| | 40 | **87168** |
| | 45 | **87172** |
| | 50 | **87176** |
| | 60 | **87177** |
| | 70 | **87178** |
| **M12** Pitch 1.75 8mm Key | 20 | **87180** |
| | 25 | **87184** |
| | 30 | **87188** |
| | 35 | **87192** |
| | 40 | **87196** |
| | 45 | **87200** |
| | 50 | **87204** |
| | 55 | **87205** |
| | 60 | **87206** |
| | 70 | **87189** |
| | 90 | **87202** |
| **M16** Pitch 2.00 10mm Key | 30 | **87207** |
| | 35 | **87208** |
| | 40 | **87212** |
| | 45 | **87213** |
| | 50 | **87216** |
| | 60 | **87220** |
| | 70 | **87221** |