Holo-Krome®
The Difference is Easy To See
800-688-8949 • www.Holo-Krome.com • Wallingford, CT

PRODUCT DATA SHEET



Flat Head Socket Cap Screw

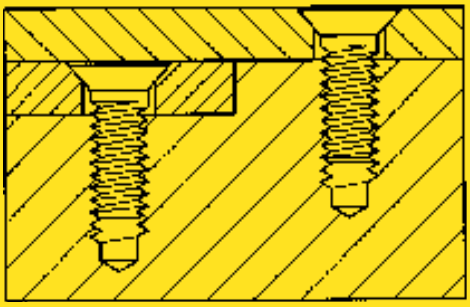

Applications:

- Flush mounted applications where one part slides over another
- Flat heads are limited by configuration in their tensile strength capability

Benefits:

- Unified standard threads are Class 3A UNRC and UNRF with Holo-Krome controlled radius roots and radius run-out
- Closely controlled fillet between head and body provides maximum fatigue strength
- Inch Series: ASME/ANSI B18.3 and ASTM F 835
- Metric Series: Reference ISO 10642

Standard Flat Head Socket Cap Screw

DIAMETER	LENGTH UNDER HEAD	PRODUCT CODE NUMBER UNRC	UNRF
#4 (.112") 40 UNRC 1/16" Key	1/4"	**60002**	-
	3/8"	**60004**	-
	1/2"	**60006**	-
	5/8"	**60008**	-
	3/4"	**60010**	-
#5 (.125") 40 UNRC 5/64" Key	1/4"	**60012**	-
	3/8"	**60014**	-
	1/2"	**60016**	-
	5/8"	**60018**	-
	3/4"	**60020**	-
#6 (.138") 32 UNRC 5/64" Key	1/4"	**60022**	-
	3/8"	**60024**	-
	1/2"	**60026**	-
	5/8"	**60028**	-
	3/4"	**60030**	-
#8 (.164") 32 UNRC 3/32" Key	3/8"	**60032**	-
	1/2"	**60034**	-
	5/8"	**60036**	-
	3/4"	**60038**	-
	1"	**60040**	-
#10 (.190") 24 UNRC 32 UNRF 1/8" Key	3/8"	**60042**	**61002**
	1/2"	**60044**	**61004**
	5/8"	**60046**	**61006**
	3/4"	**60048**	**61008**
	1"	**60050**	**61010**
	1-1/4"	**60052**	**61012**
	1-1/2"	**60054**	**61014**
1/4" (.250") 20 UNRC 28 UNRF 5/32" Key	3/8"	**60056**	**61016**
	1/2"	**60058**	**61018**
	5/8"	**60060**	**61020**
	3/4"	**60062**	**61022**
	1"	**60064**	**61024**
	1-1/4"	**60066**	**61026**
	1-1/2"	**60068**	**61028**
	1-3/4"	**60070**	-
	2"	**60072**	-
5/16" (.312") 18 UNRC 24 UNRF 3/16" Key	1/2"	**60074**	**61030**
	5/8"	**60076**	**61032**
	3/4"	**60078**	**61034**
	1"	**60080**	**61036**
	1-1/4"	**60082**	**61038**
	1-1/2"	**60084**	-
	1-3/4"	**60086**	-
	2"	**60088**	-
	2-1/4"	**60090**	-
	2-1/2"	**60092**	-
3/8" (.375") 16 UNRC 24 UNRF 7/32" Key	5/8"	**60096**	**61040**
	3/4"	**60098**	**61042**
3/8" (.375") 16 UNRC 24 UNRF 7/32" Key	1"	**60100**	**61044**
	1-1/4"	**60102**	**61046**
	1-1/2"	**60104**	**61048**
	1-3/4"	**60106**	-
	2"	**60108**	-
	2-1/4"	**60110**	-
	2-1/2"	**60112**	-
	3"	**60114**	-
7/16" (.437") 14 UNRC 1/4" Key	3/4"	**60116**	-
	1"	**60118**	-
	1-1/4"	**60120**	-
	1-1/2"	**60122**	-
	3/4"	**60124**	**61050**
	1"	**60126**	**61052**
1/2" (.500") 13 UNRC 20 UNRF 5/16" Key	1-1/4"	**60128**	**61054**
	1-1/2"	**60130**	**61056**
	1-3/4"	**60132**	**61058**
	2"	**60134**	**61060**
	2-1/4"	**60136**	-
	2-1/2"	**60138**	-
	3"	**60140**	-
5/8" (.625") 11 UNRC 3/8" Key	1-1/4"	**60142**	-
	1-1/2"	**60144**	-
	1-3/4"	**60146**	-
	2"	**60148**	-
	2-1/4"	**60150**	-
	2-1/2"	**60152**	-
	3"	**60154**	-
3/4" (.750") 10 UNRC 1/2" Key	1-1/2"	**60158**	-
	1-3/4"	**60160**	-
	2"	**60162**	-
	2-1/2"	**60166**	-
	3"	**60168**	-

Metric Flat Head Socket Cap Screw

DIAMETER	LENGTH UNDER HEAD	PRODUCT CODE NUMBER
M3 Pitch 0.50 2mm Key	6	**87003**
	8	**87004**
	10	**87008**
	12	**87012**
	16	**87016**
	20	**87020**
	25	**87021**
M4 Pitch 0.70 2.55mm Key	8	**87024**
	10	**87028**
	12	**87032**
	16	**87036**
	20	**87040**
	25	**87044**
	30	**87048**
	35	**87049**
	40	**87050**
M5 Pitch 0.80 3mm Key	8	**87052**
	10	**87056**
	12	**87060**
	16	**87064**
	20	**87068**
	25	**87072**
	30	**87076**
	35	**87077**
	40	**87078**
	50	**87079**
M6 Pitch 1.00 4mm Key	10	**87084**
	12	**87088**
	16	**87092**
	20	**87096**
	25	**87100**
	30	**87104**
	35	**87108**
	40	**87112**
	45	**87113**
	50	**87114**
	60	**87115**
M8 Pitch 1.25 5mm Key	15	**87122**
	16	**87124**
	20	**87128**
	25	**87132**
	30	**87136**
	35	**87140**
	40	**87144**
	45	**87143**
	50	**87145**
	60	**87146**
	70	**87147**
M10 Pitch 1.50 6mm Key	15	**87151**
	16	**87149**
	20	**87152**
	25	**87156**
M10 Pitch 1.50 6mm Key	30	**87160**
	35	**87164**
	40	**87168**
	45	**87172**
	50	**87176**
	60	**87177**
	70	**87178**
M12 Pitch 1.75 8mm Key	20	**87180**
	25	**87184**
	30	**87188**
	35	**87192**
	40	**87196**
	45	**87200**
	50	**87204**
	55	**87205**
	60	**87206**
	70	**87189**
	90	**87202**
M16 Pitch 2.00 10mm Key	30	**87207**
	35	**87208**
	40	**87212**
	45	**87213**
	50	**87216**
	60	**87220**
	70	**87221**