Holder / No. 862

PC Mount, Shocksafe 5x20mm / 6.3x32mm Fuses



Horizontal / 2-Pin

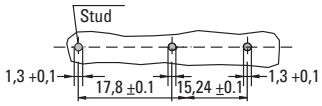

Holes in the printed circuit board: 1,3 +0,1

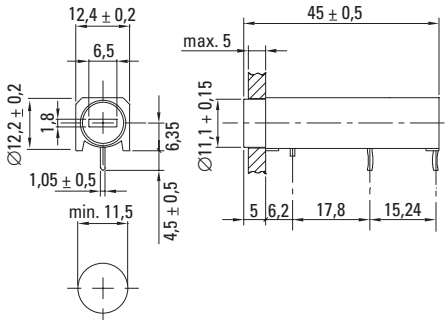

Cap / No. 865



For 5x20mm Fuses

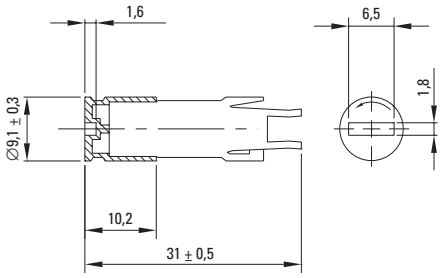

Cap / No. 866



For 6.3x32mm Fuses

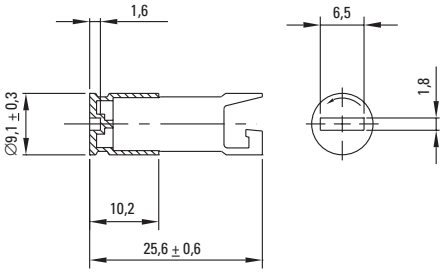

Order Information

Packaging
Bulk (100 pcs.)

Order Numbers

Holder	No. 862 0000 100
Cap, 5x20mm	No. 865 0000 100
Cap, 6.3x32mm	No. 866 0000 100

RoHS

Specifications are subject to change without notice

Note: 1.00 means the number one with two decimal places. 1,000 means the number one thousand.

Specifications

Standard
IEC 60127-6
UL 512
CSA C22.2. No.39

Approvals
VDE Report
SEMKO
UL Recognized
CSA
SEV

Mounting
(2) Solder pins 0.5mm x 1.1mm and plastic stud
Pins are kicked for optimal soldering

Protection Class & Category
IP 40 (IEC 60529)
PC2 (IEC 60127-6)

Materials
Holder/Cap: Black Thermoplastic, UL 94V0
Metal Parts: Copper alloy, corrosion protected
Terminals: Solderable, tinned

Electrical Data (23°C)
Rated Voltage: 250V
Rated Current: 10A (VDE/SEMKO/SEV)
16A (UL/CSA)
Rated Power: 862/865: 2.5W (VDE/SEV)
862/866: 3.2W (VDE/SEV)

Operating Temperature
-40°C to +85°C (consider de-rating)

Climatic Test
-40°C/+85°C/21 days (IEC 60068-2-1...3)

Stock Conditions
+10°C to +60°C
relative humidity ≤ 75% yearly average,
without dew, maximum value for 30 days - 95%

Vibration Resistance
24 cycles at 15 min. each (IEC 60068-2-6)
10 - 60Hz at 0.35mm amplitude
60 - 500Hz at 5g acceleration

Contact Resistance
≤5mΩ

Impulse Voltage
4 kV, 50 Hz, 1 min., dry

Insulation Resistance
> 10^3 MΩ (500 VDC, 1 min.)

Solderability
235°C, 2 sec. (Wave)
350°C, 1 sec. (Soldering Iron)

Soldering Heat Resistance
350°C, 5 sec. (IEC 60068-2-20)

Minimum Cross Section
Conducting path - 0.2mm^2

Marking
862, 250V, Approvals

Unit Weight
5.6g (862) / 3.3g (865) / 2.5g (866)

WICKMANN

In our continuing strategy to deliver unparalleled circuit protection solutions, technical expertise and application leadership, we proudly introduce the WICKMANN Group and its products to the Littelfuse portfolio.