HOLO-KROME®

WHEN IT MATTERS MOST™

MADE IN THE USA SINCE 1929



Critical Application Socket Head Fasteners

Available in Inch and Metric Sizes

- **Custom Designed Fastener Solutions**
- **Socket Head Cap Screws**
- **Socket Button Head Cap Screws**
- **Socket Flat Head Cap Screws**
- **Socket Low Head Cap Screws**
- **Socket Set Screws**
- **Socket Shoulder Screws**
- **Dowel Pins**
- **Socket Jam Screws**
- **Socket Pressure Plugs**



Effective March 1, 2016

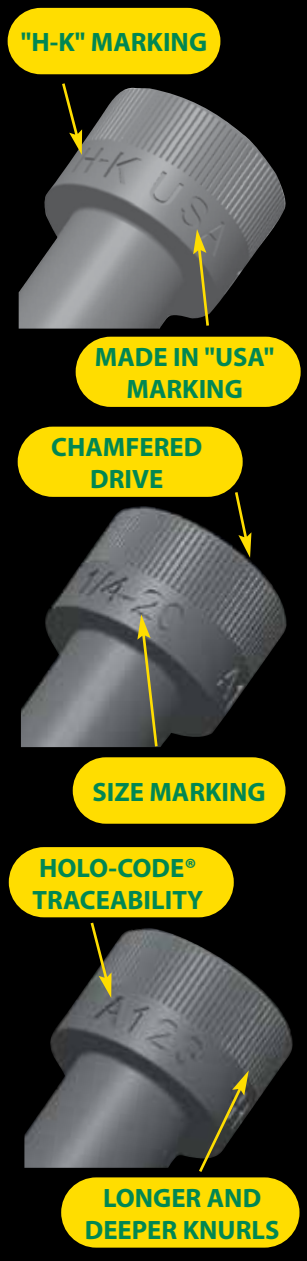

HOLO-KROME®
Made in USA
SINCE 1929

www.HOLO-KROME.com

Certificate US11/82236

The management system of

Holo-Krome Company

61 Barnes Industrial Park North
Wallingford, CT 06492, United States

has been assessed and certified as meeting the requirements of

ISO 9001:2008

For the following activities

The manufacture, procurement and delivery of fasteners and specialty formed products to industry and customer specifications.

Further clarifications regarding the scope of this certificate and the applicability of ISO 9001:2008 requirements may be obtained by consulting the organization

This certificate is valid from 24 September 2015 until 24 September 2018
and remains valid subject to satisfactory surveillance audits.
Recertification audit due a minimum of 60 days before the expiration date.
Issue 3 : 26 August 2015.
Certified since 9 February 1996.

Authorized by

John Woodman
Senior Vice President SSC, North America
SGS Systems & Services Certification, a Division of SGS North America, Inc.
201 Route 17 North, Rutherford, NJ 07070, USA
t (201) 508-3000 **f** (201) 935-4555 www.us.sgs.com

This certificate remains the property of SGS and shall be returned upon request

This document is issued by the Company subject to its General Conditions of Certification Services accessible at www.sgs.com/terms_and_conditions.htm. Attention is drawn to the limitations of liability, indemnification and jurisdictional issues established therein. The authenticity of this document may be verified at http://www.sgs.com/en/Our-Company/Certified-Client-Directories/Certified-Client-Directories.aspx. Any unauthorized alteration, forgery or falsification of the content or appearance of this document is unlawful and offenders may be prosecuted to the fullest extent of the law.

GENERAL INFORMATION

About Us: All Holo-Krome products are Made in the USA and used in a wide variety of market applications which demand high quality, high strength precision components. Since its formation in 1929, Holo-Krome has been at the forefront of fastener development and innovation. In 1930, Holo-Krome invented and later patented the first practical cold heading process for mass producing high tensile strength alloy steel socket screws. As you browse through our catalog, you will see Holo-Krome manufactures and stocks a full line of standard, high quality socket screw products. In addition to the standard product line, Holo-Krome manufactures semi-standards, special fasteners and cold headed parts.

Product Number Code: All standard products have an assigned Product Number Code shown on the boxes for ease in ordering and inventory control. All products are sold in full packages only.

Special Products: Products not in the catalog can be quoted on request. Blueprints and specifications should accompany your request.

Shipments: Holo-Krome will attempt to ship in accordance with your instructions and by carrier of your choice. However, final selection for method of shipment and carrier will be at our sole discretion.

Certifications: On request, using a lot number stamped on the outside of the Box, and or the Holo-Code® on the head of the capscrew, Holo-Krome can certify the chemical analysis, the raw material supplier and the mechanical/dimensional properties of the product.

Product Plating & Modification: Holo-Krome shall not be responsible for products plated or modified in any manner not under its control.

Prices: Prices are subject to change without notice.

Bulk Prices: Quantity pricing for bulk (non-package) available on request. For the name of the authorized Holo-Krome distributor nearest you, call toll free 1-800-879-6205.

Limited Warranty: Holo-Krome warrants, for a period of one (1) year after delivery, that all Products delivered to Purchaser hereunder shall be free from any defects in material or workmanship and in conformity with any applicable specifications. Such warranty only extends to Purchaser. Purchaser shall inspect Products within a reasonable time after receipt, and shall promptly notify Holo-Krome of any claimed defect or nonconformity. Any Products determined to be defective in material or workmanship must be returned, with an invoice and/or control number to an authorized location, shipping costs to be prepaid by Purchaser, within the one-year warranty period. THE FOREGOING WARRANTIES ARE IN PLACE OF ALL OTHER WARRANTIES, EXPRESS OR IMPLIED AND HOLO-KROME EXPRESSLY DISCLAIMS ANY OTHER WARRANTIES, INCLUDING WARRANTIES OF MERCHANTABILITY AND FITNESS FOR A PARTICULAR PURPOSE.

Disclaimer and Limitation of Liability: HOLO-KROME DISCLAIMS ANY LIABILITY FOR PRODUCT DEFECT CLAIMS THAT ARE DUE TO THE MISUSE, IMPROPER SELECTION OR MISAPPLICATION OF THE PRODUCT. IN NO EVENT WILL EITHER PARTY BE LIABLE FOR ANY SPECIAL, INDIRECT, INCIDENTAL, CONSEQUENTIAL OR EXEMPLARY DAMAGES IN CONNECTION WITH OR ARISING OUT OF THIS AGREEMENT, INCLUDING, BUT NOT LIMITED TO, DAMAGES FOR INJURIES TO PERSONS OR TO PROPERTY OR LOSS OF PROFITS OR LOSS OF FUTURE BUSINESS OR REPUTATION, WHETHER BASED ON TORT OR BREACH OF CONTRACT OR OTHER BASIS, EVEN IF IT HAS BEEN ADVISED OF THE POSSIBILITY OF SUCH DAMAGES. IN NO EVENT WILL HOLO KROME'S LIABILITY FOR DIRECT DAMAGES EXCEED THE PURCHASE PRICE OF THE PRODUCT.

TABLE OF CONTENTS

INCH FASTENERS 5-19	
Socket Head Cap Screws-Coarse Thread	5-7
Socket Head Cap Screws-Fine Thread	8-9
Socket Head Cap Screws-Stainless	9-10
Socket Low Head Cap Screws	10
Socket Flat Head Cap Screws	11
Socket Button Head Cap Screws	12
Socket Set Screws-Cup Point	13-14
Socket Set Screws-Holo-Knurl® Point	14
Socket Shoulder Screws	15
Dowel Pins-Standard	16
Dowel Pins-Oversize	17
Pull Dowels	17
Allenuts®	18
Allenuts®-Stainless	18
Socket Pressure Plugs	18-19
Socket Jam Screws	19
HEX KEYS 20	
METRIC FASTENERS..... 21-28	
Socket Head Cap Screws	21-23
Socket Low Head Cap Screws	24
Socket Head Cap Screws-Stainless	24-25
Socket Flat Head Cap Screws	25-26
Socket Button Head Cap Screws	26
Socket Shoulder Screws	27
Dowel Pins-Standard	27-28
SEMI-STANDARD FASTENERS 29-30	
Socket Cap Screws Zinc & Clear Chromate	29
Socket Cap Screws Patch	30
HOLO-KROME® SETS 31-34	
Dimension Standards Inch/Metric	31
Assortments - Inch	32-33
Assortments - Metric	34
DIMENTIONAL DATA 35-37	
Definitions of Screw and Thread Terms	35
Terms Relating to Classification and Tolerances	36
Torque Specifications	37

CUSTOMER SERVICE
Holo-Krome®
USA: 1-800-879-6205
Europe: +31 (0) 78 652 4145
www.holo-krome.com
sales@holo-krome.com

HOLO-KROME®
Made in USA
SINCE 1929

HOLO-KROME®
WHEN IT MATTERS MOST

MADE IN THE USA SINCE 1929

THE WORLD'S THIRD MOST EXPENSIVE FASTENER

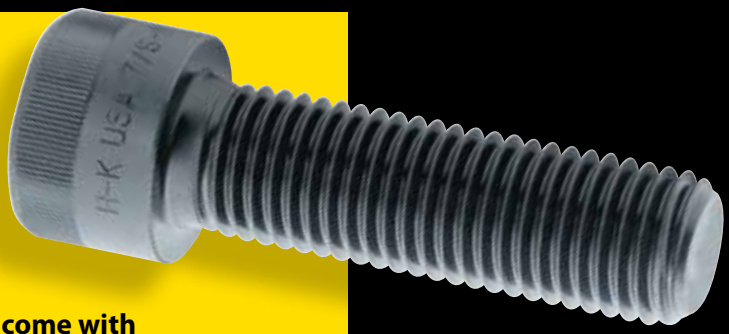

The most expensive fastener anyone can buy is one that fails. The next most expensive fastener is one that saves a few pennies on price, then takes them all back by adding dollars to your instillation costs. Next comes Holo-Krome precision fasteners, with greater endurance and fatigue life. Unlike fasteners of unknown origin, ours come with OVER 80 years of specialized engineering support – manufactured, tested and certified in our Wallingford, CT facility.

The most expensive fasteners.

These are the failures:

- **Fasteners that fail to live up to the manufacturer's or importer's claims**
- **Fasteners that save a few pennies initially, but end up costing hundreds, maybe even thousands of dollars in replacement costs**
- **Fasteners of unknown origin that don't carry a manufacturing pedigree**
- **Fasteners that can even cost you your priceless reputation**
- **Fasteners without the unmistakable Holo-Krome brand**



18/82

The second most expensive fasteners.

What they lack in strength, can usually be made up in numbers. So, drill more holes, use more and larger fasteners, and the chances are pretty good that everything will hold together. That is, everything but your budget. Here's why...

When determining total fastener cost, studies show that the per unit price of a given fastener only represents approximately 18% of its total in-place cost. The other 82% covers drilling, tapping, and assembly steps. The real money is saved by using fewer, stronger fasteners. So, before you buy imported or bargain priced fasteners, consider the overall cost figure, and discover where the real value lies.



Third most expensive fasteners – Holo-Krome.

- **Maximum available strength**
- **Precision 3A threads for greater clamping force**
- **Radius root and radius run-out threads for structural integrity**
- **Controlled fillets for uniform loading under the head**
- **Technical support to assist in solving fastening problems**
- **Holo-Code® stamped on socket heads as well as diameter and pitch, simplifying identification and traceability for users**
- **ISO 9001:2008 certified**
- **Inspection at controlled intervals — filing of test data for long term traceability, long term reliability**

When you consider the "less expensive", higher risk alternative, Holo-Krome is the real value.

Socket Head Cap Screws



UNRC COARSE THREAD SERIES • 1960 SERIES
HEAT TREATED ALLOY STEEL • UNIFIED 3A THREAD FIT
HOLO-CODE TRACEABLE • MEETS ASME B18.3 • MEETS ASTM A574

Diameter	Length Under Head	Thread Series UNRC	Product Number Code	Approx. Weight per Box (lbs.)	Qty. in Box
#2 (.086") 5/64" Key	3/16"	56	**72002**	0.1	100
	1/4"		**72004**	0.1	
	5/16"		**720000050**	0.1	50
	3/8"		**72006**	0.1	100
	7/16"		**720000070**	0.1	50
	1/2"		**72008**	0.2	100
	5/8"		**720000090**	0.1	50
	3/4"		**720000096**	0.1	
	7/8"		**720000097**	0.1	25
	1"		**720000098**	0.1	25
#3 (.099") 5/64" Key	3/16"	48	**72010**	0.1	100
	1/4"		**72012**	0.1	
	3/8"		**72014**	0.1	
	1/2"		**72016**	0.2	
	3/4		**720000174**	0.1	25
#4 (.112") 3/32" Key	3/16"	40	**86150**	0.2	100
	1/4"		**72018**	0.2	
	5/16"		**86154**	0.2	
	3/8"		**72020**	0.2	
	7/16		**720000210**	0.2	
	1/2"		**72022**	0.3	
	5/8"		**72024**	0.3	
	3/4"		**72026**	0.3	
	7/8"		**86172**	0.4	
	1"		**86176**	0.4	
	1-1/4"		**720000270**	0.5	
	1-1/2		**720000273**	0.5	
#5 (.125") 3/32" Key	1/4"	40	**72028**	0.2	100
	5/16"		**720000290**	0.3	
	3/8"		**72030**	0.3	
	1/2"		**72032**	0.3	
	5/8"		**72034**	0.3	
	3/4"		**72036**	0.4	
	7/8		**720000366**	0.1	25
	1"		**720000370**	0.1	
	1-1/4		**720000372**	0.2	
	1-1/2		**720000374**	0.2	
#6 (.138") 7/64" Key	1/4"	32	**72038**	0.3	100
	5/16"		**720000390**	0.3	
	3/8"		**72040**	0.3	
	7/16		**720000410**	0.4	
	1/2"		**72042**	0.4	
	5/8"		**72044**	0.4	
	3/4"		**72046**	0.4	
	7/8"		**72048**	0.5	
	1"		**72050**	0.5	
	1-1/4"		**86288**	0.5	
	1-1/2"		**86292**	0.6	
	1-3/4"		**86296**	0.7	
	2"		**86300**	0.8	
#8 (.164") 9/64" Key	1/4"	32	**72052**	0.4	100
	5/16"		**720000530**	0.5	
	3/8"		**72054**	0.5	
	7/16		**720000550**	0.5	
	1/2"		**72056**	0.5	
	5/8"		**72058**	0.6	
	3/4"		**72060**	0.7	
	7/8"		**72062**	0.7	
	1"		**72064**	0.8	

Diameter	Length Under Head	Thread Series UNRC	Product Number Code	Approx. Weight per Box (lbs.)	Qty. in Box
#8 (Cont.)	1-1/4"	32	**72066**	0.9	100
	1-1/2"		**72068**	1.1	
	1-3/4"		**86362**	1.2	
	2"		**86364**	1.2	
	2-1/2"		**86368**	1.3	
#10 (.190") 5/32" Key	1/4"	24	**86424**	0.5	100
	5/16		**720000700**	0.3	50
	3/8"		**72070**	0.6	100
	1/2"		**72072**	0.7	
	5/8"		**72074**	0.8	
	3/4"		**72076**	0.9	
	7/8"		**72078**	0.9	
	1"		**72080**	1.0	
	1-1/4"		**72082**	1.3	
	1-1/2"		**72084**	1.4	
	1-3/4"		**72086**	1.6	
	2"		**72088**	1.9	
	2-1/4"		**86440**	2.0	
	2-1/2"		**86442**	2.1	
	2-3/4"		**720000891**	2.4	
	3"		**720000893**	2.5	
1/4" (.250") 3/16" Key	1/4"	20	**86526**	0.8	100
	3/8"		**72090**	1.0	
	1/2"		**72092**	1.2	
	5/8"		**72094**	1.4	
	3/4"		**72096**	1.5	
	7/8"		**72098**	1.6	
	1"		**72100**	1.8	
	1-1/4"		**72102**	2.1	
	1-1/2"		**72104**	2.5	
	1-3/4"		**72106**	2.8	
	2"		**72108**	3.0	
	2-1/4"		**72110**	3.4	
	2-1/2"		**72112**	3.8	
	2-3/4"		**72114**	3.9	
	3"		**72116**	4.3	
	3-1/4"		**86576**	4.8	
	3-1/2"		**72117**	5.2	
	3-3/4"		**86580**	5.5	
	4"		**72115**	5.7	
	4-1/2"		**720001177**	3.1	50
5/16" (.312") 1/4" Key	1/2"	18	**72120**	2.0	100
	5/8"		**72122**	2.3	
	3/4"		**72124**	2.5	
	7/8"		**72126**	2.7	
	1"		**72128**	2.9	
	1-1/4"		**72130**	3.4	
	1-1/2"		**72132**	3.9	
	1-3/4"		**72134**	4.4	
	2"		**72136**	4.9	
	2-1/4"		**72138**	5.4	
	2-1/2"		**72140**	5.9	
	2-3/4"		**72142**	6.4	
	3"		**72144**	6.9	

Socket Head Cap Screws Cont.



UNRC COARSE THREAD SERIES • 1960 SERIES
HEAT TREATED ALLOY STEEL • UNIFIED 3A THREAD FIT
HOLO-CODE TRACEABLE • MEETS ASME B18.3 • MEETS ASTM A574

Diameter	Length Under Head	Thread Series UNRC	Product Number Code	Approx. Weight per Box (lbs.)	Qty. in Box
5/16" (Cont.)	3-1/4"	18	**72146**	3.7	50
	3-1/2"		**72148**	3.9	
	3-3/4"		**720001491**	4.2	
	4"		**86646**	4.5	
	4-1/2		**720001494**	0.6	5
	5		**720001497**	0.6	
	5-1/2		**720001498**	0.7	
3/8" (.375") 5/16" Key	1/2"	16	**72150**	3.4	100
	5/8"		**72152**	3.8	
	3/4"		**72154**	4.0	
	7/8"		**72156**	4.3	
	1"		**72158**	4.6	
	1-1/4"		**72160**	5.2	
	1-1/2"		**72162**	6.0	
	1-3/4"		**72164**	3.3	50
	2"		**72166**	3.9	
	2-1/4"		**72168**	4.3	
	2-1/2"		**72170**	4.5	
	2-3/4"		**72172**	4.9	
	3"		**72174**	5.1	
	3-1/4"		**72176**	5.4	
	3-1/2"		**72178**	5.8	
	3-3/4"		**720001790**	6.2	
	4"		**72180**	6.6	
	4-1/2"		**72182**	7.4	
	5"		**72184**	8.8	
	5-1/2"		**86688**	9.2	
	6"		**72185**	9.5	
7/16" (.437") 3/8" Key	3/4"	14	**72190**	5.6	100
	7/8"		**72192**	6.0	
	1"		**72194**	6.4	
	1-1/4"		**72196**	3.8	50
	1-1/2"		**72198**	4.2	
	1-3/4"		**72200**	4.6	
	2"		**72202**	5.0	
	2-1/4"		**72204**	5.5	
	2-1/2"		**72206**	6.0	
	2-3/4"		**72208**	3.3	25
	3"		**72210**	3.5	
	3-1/4"		**72212**	4.0	
	3-1/2"		**72214**	4.0	
	4"		**72216**	4.5	
	4-1/2"		**72271**	5.0	
	5"		**86724**	5.5	
1/2" (.500") 3/8" Key	1/2"	13	**72218**	3.7	50
	5/8"		**72220**	4.0	
	3/4"		**72222**	4.2	
	7/8"		**72224**	4.5	
	1"		**72226**	4.8	
	1-1/4"		**72228**	5.3	
	1-1/2"		**72230**	6.3	
	1-3/4"		**72232**	6.6	
	2"		**72234**	7.4	

Diameter	Length Under Head	Thread Series UNRC	Product Number Code	Approx. Weight per Box (lbs.)	Qty. in Box
1/2" (Cont.)	2-1/4"	13	**72236**	4.0	25
	2-1/2"		**72238**	4.4	
	2-3/4"		**72240**	4.6	
	3"		**72242**	4.9	
	3-1/4"		**72244**	5.1	
	3-1/2"		**72246**	6.0	
	3-3/4"		**72247**	6.2	
	4"		**72248**	6.3	
	4-1/4"		**720002490**	2.7	10
	4-1/2"		**72250**	7.0	25
	4-3/4"		**720002510**	3.0	10
	5"		**72252**	7.9	25
	5-1/4"		**720002530**	3.2	10
	5-1/2"		**72254**	8.6	25
	5-3/4"		**720002551**	3.5	10
	6"		**72256**	9.3	25
	6-1/4"		**720002570**	3.8	10
	6-1/2"		**72258**	3.8	
	7"		**72260**	4.0	
	7-1/2"		**720002610**	4.5	
	8"		**72262**	4.5	
	8-1/2"		**720002622**	5.0	
	9"		**720002624**	5.3	
	10"		**720002625**	5.9	
	11"		**720002627**	6.4	
	12"		**720002629**	7.0	
5/8" (.625") 1/2" Key	1"	11	**72264**	4.3	25
	1-1/4"		**72266**	4.8	
	1-1/2"		**72268**	5.3	
	1-3/4"		**72270**	5.6	
	2"		**72272**	6.0	
	2-1/4"		**72274**	6.8	
	2-1/2"		**72276**	7.3	
	2-3/4"		**72278**	7.8	
	3"		**72280**	8.4	
	3-1/4"		**72282**	9.0	
	3-1/2"		**72284**	9.5	
	4"		**72286**	10.5	
	4-1/2"		**72288**	9.5	20
	5"		**72290**	10.5	
	5-1/2"		**72292**	5.3	10
	6"		**72294**	5.5	
	6-1/2"		**72296**	5.9	
	7"		**72298**	6.3	
	7-1/2"		**720002990**	7.0	
	8"		**72300**	7.0	
	8-1/2"		**720003002**	7.9	
	9"		**720003003**	8.3	
	10"		**720003005**	9.2	
	11"		**720003006**	10.0	
	12"		**720003007**	10.9	

Socket Head Cap Screws Cont.



UNRC COARSE THREAD SERIES • 1960 SERIES
HEAT TREATED ALLOY STEEL • UNIFIED 3A THREAD FIT
HOLO-CODE TRACEABLE • MEETS ASME B18.3 • MEETS ASTM A574

Diameter	Length Under Head	Thread Series UNRC	Product Number Code	Approx. Weight per Box (lbs.)	Qty. in Box
3/4" (.750") 5/8" Key	1-1/4"	10	**72302**	7.1	25
	1-1/2"		**72304**	7.6	
	1-3/4"		**72306**	8.4	
	2"		**72308**	9.1	
	2-1/4"		**72310**	9.9	
	2-1/2"		**72312**	10.6	
	2-3/4"		**72314**	11.4	
	3"		**72316**	12.3	
	3-1/4"		**72318**	13.0	
	3-1/2"		**72320**	13.8	
	3-3/4"		**72321**	14.8	
	4"		**72322**	15.4	
	4-1/2"		**72324**	14.0	20
	5"		**72326**	14.7	
	5-1/2"		**72328**	7.9	10
	6"		**72330**	8.4	
	6-1/2"		**72332**	9.0	
	7"		**72334**	9.6	
	7-1/2"		**720003350**	10.4	
	8"		**72336**	10.8	
	8-1/2"		**720003352**	11.6	
	9"		**720003354**	12.2	
	9-1/2"		**720003356**	12.8	
	10"		**720003363**	13.5	
	11"		**720003364**	14.7	
	12"		**720003365**	16.0	
	13"		**720003366**	17.2	
7/8" (.875") 3/4" Key	2"	9	**72338**	5.1	10
	2-1/4"		**72340**	5.4	
	2-1/2"		**72342**	5.8	
	2-3/4"		**72344**	6.2	
	3"		**72346**	6.6	
	3-1/4"		**72348**	7.1	
	3-1/2"		**72350**	7.6	
	4"		**72352**	8.4	
	4-1/2"		**72354**	9.2	
	5"		**72356**	10.0	
	5-1/2"		**72358**	10.8	
	6"		**72360**	11.6	
	6-1/2"		**72362**	12.5	
	7"		**72364**	13.0	
	8"		**72366**	13.6	
1" (1.000") 3/4" Key	1-1/2"	8	**720003677**	6.1	10
	1-3/4"		**720003678**	6.6	
	2"		**72368**	7.1	
	2-1/4"		**72370**	7.6	
	2-1/2"		**72372**	8.1	
	2-3/4"		**72374**	8.5	
	3"		**72376**	9.2	
	3-1/4"		**72378**	9.7	
	3-1/2"		**72380**	10.3	
	3-3/4"		**720003810**	10.8	
	4"		**72382**	11.3	
	4-1/2"		**72384**	12.4	
	5"		**72386**	13.5	
	5-1/2"		**72388**	14.6	

Diameter	Length Under Head	Thread Series UNRC	Product Number Code	Approx. Weight per Box (lbs.)	Qty. in Box
1" (1.000") 3/4" Key	6"	8	**72390**	15.8	10
	6-1/2"		**72392**	16.8	
	7"		**72394**	17.8	
	7-1/2"		**720003950**	19.0	
	8"		**72396**	19.8	
	8-1/2"		**720003962**	21.2	
	9"		**720003964**	22.4	
	9-1/2"		**720003966**	12.0	5
	10"		**720003984**	12.5	
	11"		**720003985**	14.0	
	12"		**720003986**	14.8	
	14"		**720003987**	15.3	
1-1/4" (1.250") 7/8" Key	**UNIFIED 2A THREAD FIT**				
	3"	7	**72400**	1.6	1
	3-1/2"		**72402**	1.8	
	4"		**72404**	2.0	
	4-1/2"		**72406**	2.1	
	5"		**72408**	2.3	
	5-1/2"		**72410**	2.4	
	6"		**72412**	2.6	
	6-1/2"		**72414**	2.8	
	7"		**72416**	2.9	
	7-1/2"		**720004170**	3.2	
	8"		**72418**	3.3	
	9"		**72420**	3.8	
	10"		**72422**	4.2	
	11"		**72424**	4.6	
	12"		**720004260**	5.0	
1-1/2" (1.500") 1" Key	**UNIFIED 2A THREAD FIT**				
	3-1/2"	6	**72428**	2.5	1
	4"		**72430**	2.9	
	4-1/2"		**72432**	3.0	
	5"		**72434**	3.3	
	5-1/2"		**72436**	3.5	
	6"		**72438**	3.8	
	6-1/2"		**72440**	4.0	
	7"		**72442**	4.3	
	8"		**72444**	4.8	
	9"		**720004460**	6.3	
	10"		**720004480**	6.8	
	12"		**720004520**	7.3	

Socket Head Cap Screws Cont.



UNRF FINE THREAD SERIES • 1960 SERIES
HEAT TREATED ALLOY STEEL • UNIFIED 3A THREAD FIT
HOLO-CODE TRACEABLE • MEETS ASME B18.3 • MEETS ASTM A574

Diameter	Length Under Head	Thread Series UNRF	Product Number Code	Approx. Weight per Box (lbs.)	Qty. in Box
#0 (.060") .050" Key	1/8"	80	**73002**	0.1	100
	3/16"		**73004**	0.1	
	1/4"		**73006**	0.1	
	3/8"		**73008**	0.1	
#1 (.073") 1/16" Key	1/4"	72	**73014**	0.1	100
	3/8"		**73016**	0.1	
#4 (.112") 3/32" Key	1/4	48	**730000180**	0.1	50
	3/8		**730000200**	0.1	
	1/2		**730000220**	0.1	
	1		**730000270**	0.1	25
#6 (.138") 7/64" Key	1/4"	40	**73018**	0.3	100
	3/8"		**73020**	0.3	
	1/2"		**73022**	0.4	
	5/8"		**73024**	0.4	
	3/4"		**73026**	0.4	
	1		**730000500**	0.2	25
	1-1/4		**730000510**	0.2	
#8 (.164") 9/64" Key	3/8"	36	**73028**	0.5	100
	1/2"		**73030**	0.5	
	3/4"		**73032**	0.7	
	1		**730000640**	0.2	25
#10 (.190") 5/32" Key	1/4"	32	**77388**	0.5	100
	5/16		**730000698**	0.6	100
	3/8"		**73034**	0.6	100
	1/2"		**73036**	0.7	100
	5/8"		**73038**	0.8	100
	3/4"		**73040**	0.9	100
	7/8"		**73042**	0.9	100
	1"		**73044**	1.0	100
	1-1/4"		**73046**	1.3	100
	1-1/2"		**73048**	1.4	100
	1-3/4"		**73050**	1.6	100
	2"		**73052**	1.9	100
	2-1/4"		**77440**	2.0	100
	2-1/2"		**77442**	2.2	100
	2-3/4		**730000891**	2.3	100
	3 "		**77446**	2.5	100
1/4" (.250") 3/16" Key	1/4"	28	**77450**	0.8	100
	3/8"		**73054**	1.0	100
	1/2"		**73056**	1.2	100
	5/8"		**73058**	1.4	100
	3/4"		**73060**	1.5	100
	7/8"		**73062**	1.6	100
	1"		**73064**	1.8	100
	1-1/4"		**73066**	2.1	100
	1-1/2"		**73068**	2.5	100
	1-3/4"		**73070**	2.8	100
	2 "		**73072**	3.0	100
	2-1/4"		**73074**	3.4	100
	2-1/2"		**77474**	3.8	100
	3 "		**77478**	4.3	100
	4 "		**77482**	5.7	100

Diameter	Length Under Head	Thread Series UNRF	Product Number Code	Approx. Weight per Box (lbs.)	Qty. in Box
5/16" (.312") 1/4" Key	1/2"	24	**73076**	2.0	100
	5/8"		**73078**	2.3	
	3/4"		**73080**	2.5	
	7/8"		**73082**	2.7	
	1"		**73084**	2.9	
	1-1/4"		**73086**	3.4	
	1-1/2"		**73088**	3.9	
	1-3/4"		**73090**	4.4	
	2 "		**73092**	4.9	
	2-1/4"		**73094**	5.4	
	2-1/2"		**73096**	5.9	
	3"		**730001440**	6.9	
	3-1/2"		**730001480**	3.9	50
	4"		**730001490**	4.5	
3/8" (.375") 5/16" Key	1/2"	24	**73098**	3.4	100
	5/8"		**73100**	3.8	
	3/4"		**73102**	4.0	
	7/8"		**73104**	4.3	
	1"		**73106**	4.6	
	1-1/4"		**73108**	5.2	
	1-1/2"		**73110**	6.0	
	1-3/4"		**73112**	3.3	50
	2"		**73114**	3.9	
	2-1/4"		**73116**	4.3	
	2-1/2"		**73118**	4.5	
	2-3/4"		**73119**	4.9	
	3"		**73120**	5.1	
	3-1/2"		**77500**	5.8	
	4"		**77504**	6.6	
	4-1/2"		**730001820**	7.4	
	5"		**77510**	8.8	
	5-1/2"		**730001840**	9.2	
	6"		**730001850**	9.5	
7/16" (.437") 3/8" Key	1"	20	**73122**	6.4	100
	1-1/4"		**73124**	3.8	50
	1-1/2"		**73126**	4.2	
	2 "		**73128**	5.0	
	2-1/2"		**730002060**	6.0	
	3"		**730002080**	3.5	25
	3-1/2"		**730002140**	4.0	
1/2" (.500") 3/8" Key	3/4"	20	**730002220**	4.2	50
	1"		**73130**	4.8	
	1-1/4"		**73132**	5.3	
	1-1/2"		**73134**	6.3	
	1-3/4"		**73136**	6.6	
	2"		**73138**	7.4	
	2-1/4"		**73140**	4.0	25
	2-1/2"		**73142**	4.4	
	2-3/4"		**73143**	4.6	
	3"		**73144**	4.9	
	3-1/2"		**73145**	6.0	
	4"		**77540**	6.3	
	4-1/2"		**77544**	7.0	
	5"		**77548**	7.9	
	5-1/2"		**77552**	8.6	
	6"		**77556**	9.3	

Socket Head Cap Screws Cont.



UNRF FINE THREAD SERIES • 1960 SERIES
HEAT TREATED ALLOY STEEL • UNIFIED 3A THREAD FIT
HOLO-CODE TRACEABLE • MEETS ASME B18.3 • MEETS ASTM A574

Diameter	Length Under Head	Thread Series UNRF	Product Number Code	Approx. Weight per Box (lbs.)	Qty. in Box
5/8" (.625") 1/2" Key	1"	18	**73146**	4.3	25
	1-1/4"		**73148**	4.8	
	1-1/2"		**73150**	5.3	
	1-3/4"		**73152**	5.6	
	2"		**73154**	6.0	
	2-1/2"		**73156**	7.3	
	2-1/4"		**73155**	6.8	
	2-3/4"		**73158**	7.8	
	3"		**73160**	8.4	
	3-1/2"		**73164**	9.5	
	4"		**73168**	10.5	
	4-1/2"		**73172**	9.5	20
	5"		**73176**	10.5	

Diameter	Length Under Head	Thread Series UNRF	Product Number Code	Approx. Weight per Box (lbs.)	Qty. in Box
3/4" (.750") 5/8" Key	1-1/4"	16	**730003020**	7.1	25
	1-1/2"		**730003040**	7.6	
	1-3/4"		**730003060**	8.0	
	2"		**730003080**	9.1	
	2-1/4"		**730003100**	9.9	
	2-1/2"		**730003120**	10.6	
	2-3/4"		**730003140**	11.4	
	3"		**730003160**	12.3	
	3-1/2"		**730003200**	13.8	
	3-3/4"		**730003210**	14.8	
	4"		**730003220**	15.4	
	4-1/2"		**730003240**	17.1	
	5"		**730003260**	18.8	
	5-1/2"		**730003280**	8.0	10
	6"		**730003300**	8.7	
	7"		**730003340**	10.0	
	8"		**730003360**	11.2	

Stainless Socket Cap Screws



COARSE AND FINE THREAD SERIES
• NON-HEAT TREATED • PASSIVATED FINISH • UNIFIED 3A THREAD FIT
MEETS ASME B18.3 • MEETS ASTM F837 CONDITION CW1

Diameter	Length Under Head	Product Number Code		Approx. Weight per Box (lbs.)	Qty. in Box
		UNRC	UNRF		
#2 (.086") 56 UNRC 5/64" Key	1/4"	**78004**	-	0.1	100
	3/8"	**78006**	-	0.1	
#4 (.112") 40 UNRC 3/32" Key	3/16"	**780110019**	-	0.1	100
	1/4"	**78010**	-	0.2	
	5/16"	**780110031**	-	0.1	
	3/8"	**78012**	-	0.2	
	7/16"	**780110044**		0.2	
	1/2"	**78014**	-	0.3	
	5/8"	**780110063**	-	**0.2**	
	3/4"	**780110075**	-	0.2	
	7/8"	**780110088**	-	0.2	
	1"	**780110100**	-	0.3	
	1-1/4"	**780110125**	-	0.3	
	1-1/2"	**780110150**	-	0.4	
#6 (.138") 32 UNRC 7/64" Key	1/4"	**78016**	-	0.3	100
	5/16"	**780140031**	-	0.2	
	3/8"	**78018**	-	0.3	
	1/2"	**78020**	-	0.4	
	5/8"	**78022**	-	0.4	
	3/4"	**78024**	-	0.4	
	7/8"	**780140088**	-	0.4	
	1"	**780140100**	-	0.4	
	1-1/4"	**780140125**	-	0.5	
	1-1/2"	**780140150**	-	0.6	
	1-3/4"	**780140175**	-	0.7	

Diameter	Length Under Head	Product Number Code		Approx. Weight per Box (lbs.)	Qty. in Box
		UNRC	UNRF		
#8 (.164") 32 UNRC 9/64" Key	1/4"	**780160025**	-	0.3	100
	5/16"	**780160031**	-	0.4	
	3/8"	**78026**	-	0.5	
	1/2"	**78028**	-	0.5	
	5/8"	**78030**	-	0.6	
	3/4"	**78032**	-	0.7	
	7/8"	**780160088**	-	0.6	
	1"	**78034**	-	0.8	
	1-1/4"	**780160125**	-	0.8	
	1-1/2"	**780160150**	-	0.9	
	1-3/4"	**780160175**	-	1.0	
	2"	**780160200**	-	1.2	
	2-1/2"	**780160250**	-	1.5	
#10 (.190") 24 UNRC 32 UNRF 5/32" Key	1/4"	**780190025**	**790190025**	0.4	100
	5/16"	**780190031**	**790190031**	0.6	
	3/8"	**78036**	**79018**	0.6	
	1/2"	**78038**	**79020**	0.7	
	5/8"	**78040**	**79022**	0.8	
	3/4"	**78042**	**79024**	0.9	
	7/8"	**78044**	**790190088**	0.9	
	1"	**780190100**	**79028**	0.9	
	1-1/4"	**780190125**	**79030**	1.1	
	1-1/2"	**780190150**	**79032**	1.2	
	1-3/4"	**780190175**	**790190175**	1.4	
	2"	**780190200**	**790190200**	1.6	
	2-1/4"	**780190225**	**790190225**	1.8	
	3"	-	**790190300**	2.5	

Stainless Socket Cap Screws Cont.



COARSE AND FINE THREAD SERIES
• NON-HEAT TREATED • PASSIVATED FINISH • UNIFIED 3A THREAD FIT
MEETS ASME B18.3 • MEETS ASTM F837 CONDITION CW1

Diameter	Length Under Head	Product Number Code		Approx. Weight per Box (lbs.)	Qty. in Box
		UNRC	UNRF		
1/4" (.250") 20 UNRC 28 UNRF 3/16" Key	3/8"	**78052**	-	1.0	100
	1/2"	**78054**	-	1.2	
	5/8"	**78056**	**79036**	1.4	
	3/4"	**78058**	**79038**	1.5	
	7/8"	**78060**	-	1.6	
	1"	**78062**	**79040**	1.8	
	1-1/4"	**78064**	-	2.1	
	1-1/2"	**78066**	-	2.5	
	1-3/4"	**78068**	-	2.8	
	2"	**78070**	-	3.0	
5/16" (.312") 18 UNRC 1/4" Key	1/2"	**78072**	-	2.0	100
	3/4"	**78076**	-	2.5	
	7/8"	**78078**	-	2.7	
	1"	**78080**	-	2.9	
	1-1/4"	**78082**	-	3.4	
	1-1/2"	**78084**	-	3.9	
	2"	**78088**	-	4.9	

Diameter	Length Under Head	Product Number Code		Approx. Weight per Box (lbs.)	Qty. in Box
		UNRC	UNRF		
3/8" (.375") 16 UNRC 5/16" Key	1/2"	**78090**	-	3.4	100
	5/8"	**78092**	-	3.8	
	3/4"	**78094**	-	4.0	
	1"	**78098**	-	4.6	
	1-1/4"	**78100**	-	5.2	
	1-1/2"	**78102**	-	6.0	
	1-3/4"	**78104**	-	3.3	50
	2"	**78106**	-	3.9	
	2-1/2"	**78108**	-	4.5	
1/2" (.500") 13 UNRC 3/8" Key	1"	**78112**	-	4.8	50
	1-1/4"	**78114**	-	5.3	
	1-1/2"	**78116**	-	6.3	
	1-3/4"	**78118**	-	6.6	
	2"	**78120**	-	7.4	

Socket Low Head Cap Screws



COARSE AND FINE THREAD SERIES
HEAT TREATED ALLOY STEEL • UNIFIED 3A THREAD FIT
MEETS ASME B18.3

Diameter	Length Under Head	Product Number Code		Approx. Weight per Box (lbs.)	Qty. in Box
		UNRC	UNRF		
#8 (.164") 32 UNRC 5/64" Key Head Height .082	3/8"	**68002**	-	0.3	100
	1/2"	**68004**	-	0.3	
	3/4"	**68008**	-	0.5	
	1"	**68010**	-	0.7	
#10 (.190") 24 UNRC 32 UNRF 3/32" Key Head Height .095	3/8"	**68012**	**69002**	0.4	100
	1/2"	**68014**	**69004**	0.5	
	5/8"	-	**69006**	0.6	
	3/4"	**68018**	**69008**	0.7	
1/4" (.250") 20 UNRC 1/8" Key Head Height .125	3/8"	**68022**	-	0.7	100
	1/2"	**68024**	-	0.8	
	5/8"	**68026**	-	1.1	
	3/4"	**68028**	-	1.2	
	1"	**68030**	-	1.3	

Diameter	Length Under Head	Product Number Code		Approx. Weight per Box (lbs.)	Qty. in Box
		UNRC	UNRF		
5/16" (.312") 18 UNRC 5/32" Key Head Height .156	1/2"	**68032**	-	1.4	100
	3/4"	**68034**	-	1.8	
	1"	**68036**	-	2.2	
	1-1/4"	**68038**	-	2.8	
	1-1/2"	**68040**	-	3.3	
3/8" (.375") 16 UNRC 3/16" Key Head Height .187	1/2"	**68042**	-	2.2	100
	3/4"	**68044**	-	2.8	
	1"	**68046**	-	3.5	
	1-1/4"	**68048**	-	4.2	
	1-1/2"	**68050**	-	5.0	
1/2" (.500") 13 UNRC 1/4" Key Head Height .250	1"	**68052**	-	3.7	50
	1-1/4"	**68054**	-	4.1	
	1-1/2"	**68056**	-	4.7	

PLEASE ORDER BY PRODUCT NUMBER CODE • MADE TO PRINT ENGINEERED SPECIALS

Socket Flat Head Cap Screws



COARSE AND FINE THREAD SERIES
HEAT TREATED ALLOY STEEL • UNIFIED 3A THREAD FIT
MEETS ASME B18.3 • MEETS ASTM F835

Diameter	Length Overall	Product Number Code		Approx. Weight per Box (lbs.)	Qty. in Box
		UNRC	UNRF		
#4 (.112") 40 UNRC 1/16" Key	1/4"	**60002**	-	0.1	100
	3/8"	**60004**	-	0.2	
	1/2"	**60006**	-	0.2	
	5/8"	**60008**	-	0.2	
	3/4"	**60010**	-	0.3	
#5 (.125") 40 UNRC 5/64" Key	1/4"	**60012**	-	0.1	100
	3/8"	**60014**	-	0.2	
	1/2"	**60016**	-	0.2	
	5/8"	**60018**	-	0.3	
	3/4"	**60020**	-	0.3	
#6 (.138") 32 UNRC 5/64" Key	1/4"	**60022**	-	0.2	100
	3/8"	**60024**	-	0.2	
	1/2"	**60026**	-	0.3	
	5/8"	**60028**	-	0.3	
	3/4"	**60030**	-	0.3	
#8 (.164") 32 UNRC 3/32" Key	3/8"	**60032**	-	0.3	100
	1/2"	**60034**	-	0.3	
	5/8"	**60036**	-	0.4	
	3/4"	**60038**	-	0.5	
	1"	**60040**	-	0.6	
#10 (.190") 24 UNRC 32 UNRF 1/8" Key	3/8"	**60042**	**61002**	4.0	100
	1/2"	**60044**	**61004**	0.5	
	5/8"	**60046**	**61006**	0.6	
	3/4"	**60048**	**61008**	0.6	
	1"	**60050**	**61010**	0.8	
	1-1/4"	**60052**	**61012**	1.0	
	1-1/2"	**60054**	**61014**	1.2	
1/4" (.250") 20 UNRC 28 UNRF 5/32" Key	3/8"	**60056**	**61016**	0.8	100
	1/2"	**60058**	**61018**	0.9	
	5/8"	**60060**	**61020**	1.0	
	3/4"	**60062**	**61022**	1.2	
	1"	**60064**	**61024**	1.4	
	1-1/4"	**60066**	**61026**	1.7	
	1-1/2"	**60068**	**61028**	2.1	
	1-3/4"	**60070**	-	2.5	
	2"	**60072**	-	2.8	
5/16" (.312") 18 UNRC 24 UNRF 3/16" Key	1/2"	**60074**	**61030**	1.6	100
	5/8"	**60076**	**61032**	1.7	
	3/4"	**60078**	**61034**	2.0	
	1"	**60080**	**61036**	2.4	
	1-1/4"	**60082**	**61038**	2.9	
	1-1/2"	**60084**	-	3.4	
	1-3/4"	**60086**	-	4.0	
	2"	**60088**	-	4.5	
	2-1/4"	**60090**	-	5.1	
	2-1/2"	**60092**	-	5.5	

Diameter	Length Overall	Product Number Code		Approx. Weight per Box (lbs.)	Qty. in Box
		UNRC	UNRF		
3/8" (.375") 16 UNRC 24 UNRF 7/32" Key	5/8"	**60096**	**61040**	2.8	100
	3/4"	**60098**	**61042**	3.0	
	1"	**60100**	**61044**	3.8	
	1-1/4"	**60102**	**61046**	4.5	
	1-1/2"	**60104**	**61048**	5.0	
	1-3/4"	**60106**	-	3.0	50
	2"	**60108**	-	3.5	
	2-1/4"	**60110**	-	3.8	
	2-1/2"	**60112**	-	4.2	
	3"	**60114**	-	4.9	
7/16" (.437") 14 UNRC 1/4" Key	3/4"	**60116**	-	3.8	100
	1"	**60118**	-	4.8	
	1-1/4"	**60120**	-	2.8	50
	1-1/2"	**60122**	-	3.4	
1/2" (.500") 13 UNRC 20 UNRF 5/16" Key	3/4"	**60124**	**61050**	2.4	50
	1"	**60126**	**61052**	3.0	
	1-1/4"	**60128**	**61054**	3.8	
	1-1/2"	**60130**	**61056**	4.4	
	1-3/4"	**60132**	**61058**	4.9	
	2"	**60134**	**61060**	5.5	
	2-1/4"	**60136**	-	3.3	25
	2-1/2"	**60138**	-	3.6	
	3"	**60140**	-	4.4	
5/8" (.625") 11 UNRC 3/8" Key	1-1/4"	**60142**	-	3.3	25
	1-1/2"	**60144**	-	3.8	
	1-3/4"	**60146**	-	4.3	
	2"	**60148**	-	4.7	
	2-1/4"	**60150**	-	5.1	
	2-1/2"	**60152**	-	5.6	
	3"	**60154**	-	6.8	
3/4" (.750") 10 UNRC 1/2" Key	1-1/2"	**60158**	-	5.8	25
	1-3/4"	**60160**	-	6.5	
	2"	**60162**	-	7.3	
	2-1/2"	**60166**	-	8.3	
	3"	**60168**	-	9.8	

Socket Button Head Cap Screws



COARSE AND FINE THREAD SERIES

HEAT TREATED ALLOY STEEL • UNIFIED 3A THREAD FIT
MEETS ASME B18.3 • MEETS ASTM F835

Diameter	Length Under Head	Product Number Code		Approx. Weight per Box (lbs.)	Qty. in Box
		UNRC	UNRF		
#4 (.112") 40 UNRC 1/16" Key	3/16	**640000010**	-	0.1	100
	1/4"	**64002**	-	0.1	
	5/16	**640000030**	-	0.1	
	3/8"	**64004**	-	0.2	
	1/2"	**64006**	-	0.2	
	5/8	**640000072**	-	0.1	50
	3/4	**640000074**	-	0.1	
	7/8	**640000076**	-	0.1	
	1	**640000078**	-	0.1	
#5 40 UNRC (.125") 5/64" Key	1/4	**640010280**	-	0.2	100
	3/8	**640010300**	-	0.1	50
	1/2	**640010320**	-	0.1	
#6 (.138") 32 UNRC 5/64" Key	1/4"	**64008**	-	0.2	100
	5/16	**640000090**	-	0.1	50
	3/8"	**64010**	-	0.2	100
	1/2"	**64012**	-	0.3	
	5/8"	**64014**	-	0.3	
	3/4	**640010460**	-	0.2	50
	7/8	**640010480**	-	0.2	
	1	**640010500**	-	0.3	
	1-1/4	**640010505**	-	0.2	25
	1-1/2	**640010508**	-	0.2	
#8 (.164") 32 UNRC 3/32" Key	1/4"	**64016**	-	0.3	100
	5/16	**640000170**		0.3	
	3/8"	**64018**	-	0.3	
	1/2"	**64020**	-	0.4	
	5/8"	**64022**	-	0.4	
	3/4"	**64024**	-	0.5	
	1"	**88348**	-	0.7	
#10 (.190") 24 UNRC 32 UNRF 1/8" Key	1/4"	**64026**	**65002**	0.4	100
	5/16		**650000270**	0.1	25
	3/8"	**64028**	**65004**	0.4	100
	1/2"	**64030**	**65006**	0.5	
	5/8"	**64032**	**65008**	0.6	
	3/4"	**64034**	**65010**	0.7	
	7/8"	**64036**	**65012**	0.4	50
	1"	**64038**	**65014**	0.4	

Diameter	Length Under Head	Product Number Code		Approx. Weight per Box (lbs.)	Qty. in Box
		UNRC	UNRF		
1/4" (.250") 20 UNRC 28 UNRF 5/32" Key	1/4		**650000392**	0.2	25
	3/8"	**64040**	**65016**	0.8	100
	1/2"	**64042**	**65018**	0.8	
	5/8"	**64044**	**65020**	0.9	
	3/4"	**64046**	**65022**	1.1	
	7/8"	**64048**	-	0.6	50
	1"	**64050**	**65024**	0.7	
5/16" (.312") 18 UNRC 24 UNRF 3/16" Key	3/8"	**64052**	**65026**	1.1	100
	1/2"	**64054**	**65028**	1.4	
	5/8"	**64056**	**65030**	1.6	
	3/4"	**64058**	**65032**	1.8	
	7/8"	**64060**	-	1.0	50
	1"	**64062**	**65034**	1.1	
3/8" (.375") 16 UNRC 24 UNRF 7/32" Key	1/2"	**64064**	**65036**	1.1	50
	5/8"	**64066**	-	1.2	
	3/4"	**64068**	**65037**	2.5	
	7/8"	**64070**	-	1.5	
	1"	**64072**	**65038**	1.6	
	1-1/4"	**64074**	-	2.0	
1/2" (.500") 13 UNRC 5/16" Key	1"	**64076**	-	1.7	25
	1-1/4"	**64078**	-	2.0	
	1-1/2"	**64080**	-	2.3	
	2"	**64082**	-	3.0	
5/8" (.625") 11 UNRC 3/8" Key	1"	**64084**	-	2.9	25
	1-1/4"	**64086**	-	3.3	
	1-1/2"	**64088**	-	3.8	
	2"	**64090**	-	4.8	

Holo-Krome® Socket Screw Selector

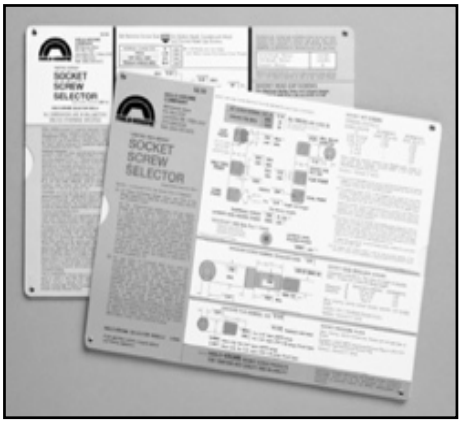

These socket screw selectors are available in inch and metric for your fastener design needs.

Socket Selector
Part numbers:
SAE: 99013
Metric: 99014

Contact Customer Service at
1-800-879-6205 to order.

Socket Set Screws

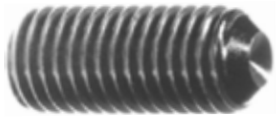

COARSE & FINE THREAD SERIES

HEAT TREATED ALLOY STEEL • UNIFIED 3A THREAD FIT
MEETS ASME B18.3 • MEETS ASTM F912

CUP POINT

Diameter	Length Overall	Product Number Code		Approx. Weight per Box (lbs.)	Qty. in Box
		UNC	UNF		
#4 (.112") 40 UNC 48 UNF .050" Key	1/8"	**32020**	**33020**	0.1	100
	3/16"	**32022**	**33022**	0.1	
	1/4"	**32024**	**33024**	0.1	
	5/16"	**32026**	-	0.1	
	3/8"	**32028**	-	0.1	
	1/2"	**32030**	-	0.1	
	5/8"	**32032**	-	0.2	
#5 (.125") 40 UNC 44 UNF 1/16" Key	1/8"	**32034**	**33026**	0.1	100
	3/16"	**32036**	-	0.1	
	1/4"	**32038**	-	0.1	
	5/16"	**32040**	-	0.1	
	3/8"	**32042**	-	0.1	
	1/2"	**32044**	-	0.2	
	5/8"	**32046**	-	0.2	
	3/4"	**32048**	-	0.2	
#6 (.138") 32 UNC 40 UNF 1/16" Key	1/8"	**32050**	**33032**	0.1	100
	3/16"	**32052**	**33034**	0.1	
	1/4"	**32054**	**33036**	0.1	
	5/16"	**32056**	-	0.1	
	3/8"	**32058**	**33040**	0.1	
	1/2"	**32060**	-	0.2	
	5/8"	**32062**	-	0.2	
	3/4"	**32064**	-	0.3	
	7/8"	**32066**	-	0.3	
	1"	**32068**	-	0.4	
#8 (.164") 32 UNC 36 UNF 5/64" Key	1/8"	**32070**	**33042**	0.1	100
	3/16"	**32072**	**33044**	0.1	
	1/4"	**32074**	**33046**	0.1	
	5/16"	**32076**	-	0.2	
	3/8"	**32078**	**33050**	0.2	
	7/16"	**32080**	-	0.2	
	1/2"	**32082**	-	0.2	
	5/8"	**32084**	-	0.3	
	3/4"	**32086**	-	0.3	
	7/8"	**32088**	-	0.4	
	1"	**32090**	-	0.5	
#10 (.190") 24 UNC 32 UNF 3/32" Key	3/16"	**32092**	**33054**	0.1	100
	1/4"	**32094**	**33056**	0.1	
	5/16"	**32096**	**33058**	0.2	
	3/8"	**32098**	**33060**	0.3	
	1/2"	**32100**	**33062**	0.3	
	5/8"	**32102**	**33064**	0.3	
	3/4"	**32104**	**33066**	0.4	
	7/8"	**32106**	-	0.4	
	1"	**32108**	**33068**	0.5	
	1-1/4"	**32110**	**33070**	0.6	
1/4" (.250") 20 UNC 28 UNF 1/8" Key	3/16"	**32112**	**33072**	0.3	100
	1/4"	**32114**	**33074**	0.3	
	5/16"	**32116**	**33076**	0.3	
	3/8"	**32118**	**33078**	0.4	
	1/2"	**32120**	**33080**	0.5	

Diameter	Length Overall	Product Number Code		Approx. Weight per Box (lbs.)	Qty. in Box
		UNC	UNF		
1/4" (Cont.)	5/8"	**32122**	**33082**	0.6	100
	3/4"	**32124**	**33084**	0.8	
	7/8"	**32126**	-	0.9	
	1"	**32128**	**33086**	1.0	
	1-1/4"	**32130**	**33088**	1.3	
	1-1/2"	**32132**	-	1.6	
	1-3/4"	**32134**	-	0.9	50
	2"	**32136**	-	1.0	
5/16" (.312") 18 UNC 24 UNF 5/32" Key	1/4"	**32138**	**33090**	0.4	100
	5/16"	**32140**	**33092**	0.4	
	3/8"	**32142**	**33094**	0.5	
	1/2"	**32146**	**33096**	0.8	
	5/8"	**32148**	**33098**	1.0	
	3/4"	**32150**	**33100**	1.2	
	7/8"	**32152**	-	1.4	
	1"	**32154**	**33102**	1.7	
	1-1/4"	**32156**	-	2.0	
	1-1/2"	**32158**	-	2.4	
	1-3/4"	**32160**	-	1.3	50
	2"	**32162**	-	1.4	
3/8" (.375") 16 UNC 24 UNF 3/16" Key	1/4"	**32164**	**33104**	0.7	100
	3/8"	**32168**	**33106**	0.9	
	7/16"	**32170**	-	1.0	
	1/2"	**32172**	**33108**	1.1	
	5/8"	**32174**	**33110**	1.3	
	3/4"	**32176**	**33112**	1.8	
	7/8"	**32178**	-	2.0	
	1"	**32180**	**33114**	2.3	
	1-1/4"	**32182**	**33116**	2.9	
	1-1/2"	**32184**	**33118**	3.5	
	1-3/4"	**32186**	-	2.0	50
	2"	**32188**	-	2.3	
	2-1/2"	**32190**	-	3.0	
7/16" (.437") 14 UNC 20 UNF 7/32" Key	3/8"	**32192**	**33120**	1.1	100
	7/16"	**32194**	**33122**	1.3	
	1/2"	**32196**	**33124**	1.4	
	5/8"	**32198**	-	1.8	
	3/4"	**32200**	-	2.3	
	7/8"	**32202**	-	1.3	50
	1"	**32204**	-	1.5	
	1-1/4"	**32206**	-	2.0	
	1-1/2"	**32208**	-	2.4	
	2"	**32210**	-	3.3	
1/2" (.500") 13 UNC 20 UNF 1/4" Key	3/8"	**32212**	-	1.5	100
	1/2"	**32214**	**33126**	2.0	
	5/8"	**32216**	-	2.5	
	3/4"	**32218**	**33128**	2.8	
	7/8"	**32220**	-	1.7	50
	1"	**32222**	**33130**	2.0	
	1-1/4"	**32224**	-	2.4	
	1-1/2"	**32226**	-	3.0	
	1-3/4"	**32228**	-	1.8	25
	2"	**32230**	-	2.1	
	2-1/2"	**32232**	-	2.6	
	3"	**32234**	-	3.1	

Socket Set Screws Cont.

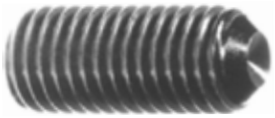

COARSE & FINE THREAD SERIES CONT.

HEAT TREATED ALLOY STEEL • UNIFIED 3A THREAD FIT
MEETS ASME B18.3 • MEETS ASTM F912

CUP POINT

Diameter	Length Overall	Product Number Code UNC	Product Number Code UNF	Approx. Weight per Box (lbs.)	Qty. in Box
5/8" (.625") 11 UNC 18 UNF 5/16" Key	1/2"	**32236**	-	2.8	100
	5/8"	**32238**	**33132**	1.8	50
	3/4"	**32240**	-	2.1	
	1"	**32242**	**33134**	3.0	
	1-1/4"	**32244**	-	1.9	25
	1-1/2"	**32246**	-	2.4	
	1-3/4"	**32248**	-	2.9	
	2"	**32250**	-	3.2	
	2-1/2"	**32252**	-	1.7	10
	3"	**32254**	-	2.1	
3/4" (.750") 10 UNC 3/8" Key	5/8"	**32256**	-	2.8	50
	3/4"	**32258**	-	3.3	
	1"	**32260**	-	4.3	

Diameter	Length Overall	Product Number Code UNC	Product Number Code UNF	Approx. Weight per Box (lbs.)	Qty. in Box
3/4" (Cont.)	1-1/4"	**32262**	-	2.7	25
	1-1/2"	**32264**	-	3.4	
	1-3/4"	**32266**	-	1.6	10
	2"	**32268**	-	1.8	
	2-1/2"	**32270**	-	2.4	
	3"	**32272**	-	2.9	
7/8" (.875") 9 UNC 1/2" Key	7/8"	**32274**	-	0.9	10
	1"	**32276**	-	1.0	
	2-1/2"	**32282**	-	3.1	
1" (1.000") 9/16" Key	1"	**32286**	-	1.3	10
	1-1/2"	**32288**	-	2.2	
	2"	**32290**	-	3.2	
	3"	**32294**	-	5.0	

Socket Set Screws



COARSE & FINE THREAD SERIES

HEAT TREATED ALLOY STEEL • UNIFIED 3A THREAD FIT
MEETS ASME B18.3 • MEETS ASTM F912

HOLO-KNURL® POINT

Diameter	Length Overall	Product Number Code UNC	Product Number Code UNF	Approx. Weight per Box (lbs.)	Qty. in Box
#4 (.112") 40 UNC .050" Key	1/8"	**42002**	-	0.1	100
#6 (.138") 32 UNC 40 UNF 1/16" Key	1/8"	**42008**	**43006**	0.1	100
	3/16"	**42010**	-	0.1	
	1/4"	**42012**	-	0.1	
#8 (.164") 32 UNC 5/64" Key	1/8"	**42014**	-	0.1	100
	3/16"	**42016**	-	0.1	
	1/4"	**42018**	-	0.1	
	3/8"	**42020**	-	0.2	
#10 (.190") 24 UNC 32 UNF 3/32" Key	3/16"	-	**43008**	0.1	100
	1/4"	**42024**	**43010**	0.1	
	3/8"	-	**43012**	0.3	
	1/2"	-	**43014**	0.3	
1/4" (.250") 20 UNC 28 UNF 1/8" Key	3/16"	**42026**	**43016**	0.3	100
	1/4"	**42028**	**43018**	0.3	
	5/16"	**42030**	**43020**	0.3	
	3/8"	**42032**	**43022**	0.4	
	1/2"	**42034**	-	0.5	
	3/4"	**42036**	-	0.8	

Diameter	Length Overall	Product Number Code UNC	Product Number Code UNF	Approx. Weight per Box (lbs.)	Qty. in Box
5/16" (.312") 18 UNC 24 UNF 5/32" Key	1/4"	**42038**	**43024**	0.4	100
	5/16"	**42040**	**43026**	0.4	
	3/8"	**42042**	**43028**	0.5	
	1/2"	**42043**	**43030**	0.8	
	5/8"	**42044**	-	1.0	
	3/4"	**42045**	-	1.2	
	1"	**42046**	-	1.7	
3/8" (.375") 16 UNC 24 UNF 3/16" Key	3/8"	**42047**	**43032**	0.9	100
	1/2"	**42048**	**43034**	1.1	
	3/4"	**42049**	-	1.8	
	1"	**42050**	-	2.3	
1/2" (.500") 13 UNC 1/4" Key	1/2"	**42052**	-	2.0	100
	5/8"	**42054**	-	2.5	
	3/4"	**42056**	-	2.8	50
	1"	**42058**	-	2.0	



HOLO-KNURL® POINT

INTERNAL KNURL POINT SOCKET SET SCREW — with the following advantages:

- Ratchet Locking Action
- Superior Holding Power
- Thermo-Forged® Point and Socket
- Precision Ground or Rolled Threads
- Heat Treated Alloy Steel

Socket Shoulder Screws



HEAT TREATED ALLOY STEEL • UNIFIED 3A THREAD FIT
MEETS ASME B18.3 • HEAT TREATED TO HRC 32 - 43

Diameter	Shoulder Length	Product Number Code	Approx. Weight per Box (lbs.)	Qty. In Box
1/4" (.246") (.248") 1/8" Key THREAD SERIES #10-24 UNRC	3/8"	**08002**	0.4	25
	1/2"	**08004**	0.4	
	5/8"	**08006**	0.4	
	3/4"	**08008**	0.5	
	1"	**08010**	0.6	
	1-1/4"	**08012**	0.6	
	1-1/2"	**08014**	0.8	
5/16" (.3085") (.3105") 5/32" Key THREAD SERIES 1/4-20 UNRC	3/8"	**08016**	0.5	25
	1/2"	**08018**	0.6	
	5/8"	**08020**	0.7	
	3/4"	**08022**	0.8	
	1"	**08024**	0.9	
	1-1/4"	**08026**	1.0	
	1-1/2"	**08028**	1.1	
	1-3/4"	**08030**	1.3	
	2"	**08032**	1.4	
3/8" (.371") (.373") 3/16" Key THREAD SERIES 5/16-18 UNRC	1/4"	**0800330**	0.9	25
	3/8"	**08034**	0.9	
	1/2"	**08036**	1.0	
	5/8"	**08038**	1.1	
	3/4"	**08040**	1.3	
	1"	**08042**	1.4	
	1-1/4"	**08046**	1.6	
	1-1/2"	**08048**	1.9	
	1-3/4"	**08049**	2.1	
	2"	**08050**	2.3	
	2-1/4"	**08052**	2.4	
	2-1/2"	**08054**	2.6	
	2-3/4"	**08056**	2.9	
	3"	**08058**	3.1	
	3-1/4"	**08060**	3.3	
	3-1/2"	**08062**	3.5	
	4"	**08064**	3.9	
1/2" (.496") (.498") 1/4" Key THREAD SERIES 3/8-16 UNRC	3/8"	**0800650**	1.9	25
	1/2"	**08066**	2.0	
	5/8"	**08068**	2.3	
	3/4"	**08070**	2.4	
	1"	**08072**	2.8	
	1-1/4"	**08074**	3.1	
	1-1/2"	**08076**	3.4	
	1-3/4"	**08078**	3.8	
	2"	**08080**	4.1	
	2-1/4"	**08082**	4.5	
	2-1/2"	**08084**	4.9	
	2-3/4"	**08086**	5.2	
	3"	**08088**	5.6	
	3-1/4"	**08090**	5.9	
	3-1/2"	**08092**	6.3	
	3-3/4"	**08093**	6.5	
	4"	**08094**	7.0	
	4-1/4"	**08095**	7.2	
	4-1/2"	**08096**	3.0	10
	4-3/4"	**08097**	3.2	
	5"	**08098**	3.4	

Diameter	Shoulder Length	Product Number Code	Approx. Weight per Box (lbs.)	Qty. In Box
5/8" (.621") (.623") 5/16" Key THREAD SERIES 1/2-13 UNRC	3/4"	**0800994**	4.1	25
	1"	**0800996**	4.7	
	1-1/4"	**08100**	5.0	
	1-1/2"	**08102**	5.6	
	1-3/4"	**08104**	6.3	
	2"	**08106**	6.8	
	2-1/4"	**08108**	7.4	
	2-1/2"	**08110**	7.9	
	2-3/4"	**08112**	8.5	
	3"	**08114**	8.9	
	3-1/4"	**08116**	9.5	
	3-1/2"	**08118**	10.0	
	3-3/4"	**08117**	4.2	
	4"	**08120**	4.4	10
	4-1/4"	**08119**	4.6	
	4-1/2"	**08122**	5.0	
	4-3/4"	**08121**	5.1	
	5"	**08124**	5.2	
	5-1/2"	**08123**	6.2	
	6"	**08125**	6.6	
3/4" (.746") (.748") 3/8" Key THREAD SERIES 5/8-11 UNRC	1-1/2"	**08126**	3.6	10
	1-3/4"	**08128**	3.8	
	2"	**08130**	4.0	
	2-1/4"	**08132**	4.4	
	2-1/2"	**08134**	4.8	
	2-3/4"	**08136**	5.0	
	3"	**08138**	5.4	
	3-1/4"	**08139**	5.6	
	3-1/2"	**08140**	6.0	
	3-3/4"	**08141**	6.3	
	4"	**08142**	6.6	
	4-1/4"	**08143**	7.0	
	4-1/2"	**08144**	7.2	
	4-3/4"	**08145**	7.6	
	5"	**08146**	7.8	
	5-1/2"	**08148**	8.5	
	6"	**08150**	9.1	



Standard Dowel Pins Black Lustre Finish

.0002 Over Listed Diameter
Rust Resistant
MEETS ASME B18.8.2

Diameter	Length Overall	Product Number Code	Approx. Weight per Box (lbs.)	Qty. in Box
1/8"	3/8"	**01002**	0.5	100
	1/2"	**01004**	0.5	
	5/8"	**01006**	0.5	
	3/4"	**01008**	0.5	
	7/8"	**01010**	0.5	
	1"	**01012**	0.5	
	1-1/4"	**01014**	0.5	
	1-1/2"	**01016**	0.5	
	2"	**01020**	1.0	
3/16"	1/2"	**01022**	0.5	100
	5/8"	**01024**	0.5	
	3/4"	**01026**	0.5	
	7/8"	**01028**	0.5	
	1"	**01030**	1.0	
	1-1/4"	**01032**	1.5	
	1-1/2"	**01034**	1.5	
	1-3/4"	**01036**	1.5	
	2"	**01038**	1.5	
1/4"	1/2"	**01040**	1.0	100
	5/8"	**01042**	1.0	
	3/4"	**01044**	1.0	
	7/8"	**01046**	1.5	
	1"	**01048**	1.5	
	1-1/4"	**01050**	2.0	
	1-1/2"	**01052**	2.0	
	1-3/4"	**01054**	2.5	
	2"	**01056**	3.0	
	2-1/4"	**01058**	3.3	
	2-1/2"	**01060**	3.5	
5/16"	1/2"	**01062**	1.5	100
	5/8"	**01064**	1.5	
	3/4"	**01066**	2.0	
	7/8"	**01068**	2.0	
	1"	**01070**	2.0	
	1-1/4"	**01072**	3.0	
	1-1/2"	**01074**	3.5	
	1-3/4"	**01076**	4.0	
	2"	**01078**	4.5	
	2-1/4"	**01080**	5.0	
	2-1/2"	**01082**	5.5	
	3"	**01084**	6.5	
3/8"	1/2"	**01086**	2.0	100
	5/8"	**01088**	2.0	
	3/4"	**01090**	2.5	
	7/8"	**01092**	2.5	
	1"	**01094**	3.0	
	1-1/4"	**01096**	4.0	
	1-1/2"	**01098**	5.0	
	1-3/4"	**01100**	2.2	40
	2"	**01102**	2.6	
	2-1/4"	**01104**	2.8	
	2-1/2"	**01106**	3.2	
	3"	**01108**	3.8	

Diameter	Length Overall	Product Number Code	Approx. Weight per Box (lbs.)	Qty. in Box
7/16"	1"	**01110**	1.8	40
	1-1/4"	**01112**	2.2	
	1-1/2"	**01114**	2.6	
	2"	**01118**	3.6	
	2-1/2"	**01120**	4.4	
	3"	**01122**	5.2	
1/2"	3/4"	**01124**	1.8	40
	1"	**01126**	2.4	
	1-1/4"	**01128**	2.8	
	1-1/2"	**01130**	3.4	
	1-3/4"	**01132**	4.0	
	2"	**01134**	4.6	
	2-1/4"	**01136**	2.6	20
	2-1/2"	**01138**	2.8	
	3"	**01140**	3.4	
	3-1/2"	**01142**	4.0	
	4"	**01144**	4.6	
5/8"	1"	**01146**	0.9	10
	1-1/4"	**01148**	1.2	
	1-1/2"	**01150**	1.4	
	1-3/4"	**01152**	1.6	
	2"	**01154**	1.8	
	2-1/2"	**01158**	2.3	
	3"	**01160**	2.7	
	3-1/2"	**01162**	3.2	
	4"	**01164**	3.6	
3/4"	2"	**01170**	2.5	10
	2-1/2"	**01172**	3.2	
	3"	**01174**	3.8	
	3-1/2"	**01176**	4.4	
	4"	**01178**	5.1	
7/8"	2"	**01186**	3.5	10
	2-1/2"	**01188**	4.4	
	3"	**01190**	5.3	
	4"	**01194**	6.9	
1"	2"	**01202**	4.5	10
	2-1/2"	**01204**	5.7	
	3"	**01206**	6.8	
	4"	**01210**	9.2	

WARNING

ALWAYS PRESS DOWEL PINS INTO PLACE USING AN ARBOR PRESS. NEVER STRIKE WITH ANY MATERIAL OR TOOL, INCLUDING A HAMMER. DOING SO MAY CAUSE THE DOWEL TO SPLINTER AND MAY RESULT IN SERIOUS BODILY INJURY.



Oversize Dowel Pins Black Lustre Finish

.001 Over Listed Diameter
Rust Resistant
MEETS ASME B18.8.2

Diameter	Length Overall	Product Number Code	Approx. Weight per Box (lbs.)	Qty. in Box
1/8"	1/2"	03004	5.0	100
	3/4"	03008	0.5	
	1"	03010	0.5	
3/16"	1/2"	03016	0.5	100
	1"	03022	1.0	
	1-1/2"	03026	1.5	
1/4"	1/2"	03030	1.0	100
	3/4"	03034	1.0	
	1"	03036	1.5	
	1-1/4"	03038	2.0	
	1-1/2"	03040	2.0	
	2"	03042	3.0	
5/16"	1"	03046	2.0	100
	1-1/2"	03050	3.5	
3/8"	1"	03058	3.0	100
	1-1/4"	03060	4.0	
	1-1/2"	03062	5.0	

Diameter	Length Overall	Product Number Code	Approx. Weight per Box (lbs.)	Qty. in Box
1/2"	1"	03070	2.4	40
	1-1/2"	03074	3.4	
	2"	03076	4.6	

WARNING

ALWAYS PRESS DOWEL PINS INTO PLACE USING AN ARBOR PRESS. NEVER STRIKE WITH ANY MATERIAL OR TOOL, INCLUDING A HAMMER. DOING SO MAY CAUSE THE DOWEL TO SPLINTER AND MAY RESULT IN SERIOUS BODILY INJURY.

Pull-Dowels



HEAT TREATED ALLOY STEEL • 8 RMS BRIGHT MICROINCH FINISH
HARDNESS: SURFACE–ROCKWELL C 60-64, CORE–ROCKWELL C 50-58
AVG SHEAR STRENGTH: 150,000 psi DIA: .0002 OVER LISTED DIAMETER • ROUNDNESS: .00005 T.I.R.

Diameter	Length Overall	Product Number Code	Approx. Weight per Box (lbs.)	Qty. in Box
5/16"	3/4"	04022	0.3	20
	1"	04026	0.4	
	1-1/4"	04028	0.6	
	1-1/2"	04030	0.7	
	2"	04034	0.9	
	2-1/2"	04038	1.4	
3/8"	1"	04042	0.6	20
	1-1/4"	04044	0.8	
	1-1/2"	04046	0.9	
	1-3/4"	04048	1.1	
	2"	04050	1.3	
	2-1/4"	04052	3.0	
	2-1/2"	04054	1.6	
	3"	04056	1.9	
1/2"	1"	04058	1.1	20
	1-1/4"	04060	1.4	
	1-1/2"	04062	1.7	
	1-3/4"	04064	2.0	
	2"	04066	2.2	
	2-1/4"	04068	2.6	
	2-1/2"	04070	2.8	
	3"	04072	3.4	
	3-1/2"	04074	4.0	

Diameter	Length Overall	Product Number Code	Approx. Weight per Box (lbs.)	Qty. in Box
5/8"	1-1/2"	04078	1.3	10
	2"	04082	1.8	
	2-1/4	04084	5.1	
	2-1/2"	04086	2.2	
	3"	04088	2.7	
3/4"	2"	04094	2.5	10
	2-1/2"	04096	3.2	
	3"	04098	3.8	
	4"	04100	5.1	
1"	2"	04102	4.5	10
	3"	04106	6.7	
	4"	04110	9.0	



Allenuts®

COARSE AND FINE THREADS

MATERIAL: ALLOY STEEL HEAT TREATED TO HRC 33-39 THREADS: UNC/UNF

Diameter Threads Per Inch	Key Size	Product Number Code	Approx. Weight per Box (lbs.)	Qty in Box
#4-40	1/8"	**06032**	0.2	100
#5-40		**06034**	0.2	
#6-32	5/32"	**06036**	0.4	
#8-32	3/16"	**06038**	0.4	
#10-24		**06040**	0.6	
#10-32		**07030**	0.6	
1/4-20	1/4"	**06042**	1.2	
1/4-28		**07032**	1.2	
5/16-18	5/16"	**06044**	2.2	
5/16-24		**07034**	2.2	
3/8-16	3/8"	**06046**	3.2	
3/8-24		**07036**	3.2	

Diameter Threads Per Inch	Key Size	Product Number Code	Approx. Weight per Box (lbs.)	Qty in Box
7/16-14	7/16"	**06048**	3.4	50
7/16-20		**07038**	3.4	
1/2-13	1/2"	**06050**	4.8	
1/2-20		**07040**	4.8	
5/8-11	5/8"	**06052**	9.0	
5/8-18		**07042**	9.0	
3/4-10	3/4"	**06054**	13.6	
3/4-16		**07044**	13.6	
7/8-9	7/8"	**06056**	10.4	25
7/8-14		**07046**	10.4	
1-8	1"	**06058**	14.8	
1-14		**07048**	14.8	



Stainless Allenuts®

COARSE AND FINE THREADS

MATERIAL: AUSTENITIC STAINLESS STEEL • THREADS: UNC/UNF

Diameter Threads Per Inch	Key Size	Product Number Code	Approx. Weight per Box (lbs.)	Qty in Box
#4-40	1/8"	**06070**	0.2	100
#6-32	5/32"	**06072**	0.4	
#8-32	3/16"	**06074**	0.4	
#10-24		**06076**	0.6	

Diameter Threads Per Inch	Key Size	Product Number Code	Approx. Weight per Box (lbs.)	Qty in Box
#10-32	3/16"	**07060**	0.6	100
1/4-20	1/4"	**06078**	1.2	
5/16-18	5/16"	**06080**	2.2	
3/8-16	3/8"	**06082**	3.2	



Socket Pressure Plugs

DRYSEAL SOCKET PRESSURE PLUGS

NPTF 3/4" DIAMETRAL TAPER PER FOOT • HEAT TREATED ALLOY STEEL TO HRC 36-43

Pressure Plug Size	Length of Plug Nom.	NPTF- 3/4" Threads Per Inch	Product Number Code	Approx. Weight per Box (lbs.)	Qty. in Box
1/16"	5/16"	27	**10002**	0.5	100
1/8"			**10004**	0.8	
1/4"	7/16"	18	**10006**	2.0	
3/8"	1/2"		**10008**	4.0	
1/2"	9/16"	14	**10010**	2.9	50
3/4"	5/8"		**10012**	5.1	
1"	3/4"	11-1/2	**10014**	5.3	25
1-1/4"	13/16"		**10016**	9.5	

STAINLESS STEEL SOCKET PRESSURE PLUGS

NPTF 3/4" DIAMETRAL TAPER PER FOOT • AUSTENITIC STAINLESS STEEL

Pressure Plug Size	Length of Plug Nom.	NPTF- 3/4" Threads Per Inch	Product Number Code	Approx. Weight per Box (lbs.)	Qty. in Box
1/8"	5/16"	27	**13002**	0.8	100
1/4"	7/16"	18	**13004**	2.0	100

Socket Pressure Plugs Cont.

FLUSH SOCKET PRESSURE PLUGS

PTF 7/8" DIAMETRAL TAPER PER FOOT
• HEAT TREATED ALLOY STEEL TO HRC 36-43

Pressure Plug Size	Length of Plug Nom.	PTF- 7/8" Threads Per Inch	Product Number Code	Approx. Weight per Box (lbs.)	Qty. in Box
1/16"	1/4"	27	**12002**	0.5	100
1/8"			**12004**	0.8	
1/4"	13/32"	18	**12006**	2.0	
3/8"			**12008**	4.0	
1/2"	17/32"	14	**12010**	2.9	50
3/4"			**12012**	5.1	

BRASS FLUSH SOCKET PRESSURE PLUGS

PTF 7/8" DIAMETRAL TAPER PER FOOT
• COMMERCIAL BRASS • LEAD FREE-COMPLIANT

Pressure Plug Size	Length of Plug Nom.	PTF- 7/8" Threads Per Inch	Product Number Code	Approx. Weight per Box (lbs.)	Qty. in Box
1/16"	1/4"	27	**11100**	0.5	100
1/8"		27	**11102**	0.8	
1/4"	13/32"	18	**11104**	2.0	
3/8"		18	**11106**	4.0	
1/2"	17/32"	14	**11108**	2.9	50
3/4"		14	**11110**	5.1	



Socket Jam Screws

HEAT TREATED ALLOY STEEL • UNIFIED 3A THREAD FIT

Diameter	Length Overall	Product Number Code		Approx. Weight per Box (lbs.)	Qty. in Box
		UNC	UNF		
#4 (.112") 40 UNC	5/64"	06002	-	0.06	100
#8 (.164") 32 UNC	7/64"	06008		0.06	
#10 (.190") 24 UNC 32 UNF	1/8"	06010	07010	0.09	
1/4" (.250") 20 UNC 28 UNF	1/8"	06012	07012	0.13	
5/16" (.312") 18 UNC 24 UNF	5/32"	06014	07014	0.25	
3/8" (.375") 16 UNC 24 UNF	3/16"	06016	07016	0.37	
7/16" (.437") 14 UNC 20 UNF	7/32"	06018	07018	0.50	
1/2" (.500") 13 UNC 20 UNF	1/4"	06020	07020	0.81	

Diameter	Length Overall	Product Number Code		Approx. Weight per Box (lbs.)	Qty. in Box
		UNC	UNF		
5/8" (.625") 11 UNC 18 UNF	5/16"	06022	07022	1.50	100
3/4" (.750") 10 UNC 16 UNF	3/8"	06024	07024	1.50	50
7/8" (.875") 9 UNC 14 UNF	7/16"	06026	07026	0.85	25
1" (1.00") 8 UNC 14 UNF	1/2"	06028	07028	1.30	

Holo-Krome® Socket Screw Selector

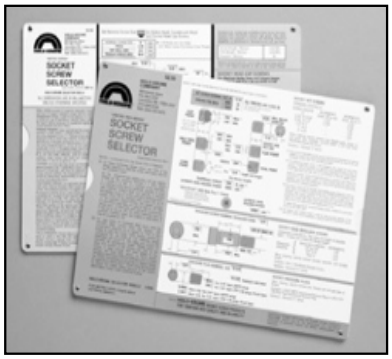

These socket screw selectors are available in inch and metric for your fastener design needs.

Socket Selector Part numbers:
SAE: 99013
Metric: 99014

Contact Customer Service at 1-800-879-6205 to order.



Hex Keys

FOLD UPS

Part Number	Description	Qty. Per Box
HK12587	Set 7 Hex Fold-up Tools 2-8mm	5
HK12589	Set 9 Hex Fold-up Tools 5/64-1/4	

HEX END L-WRENCH SETS LONG & SHORT

Part Number	Description	Qty. Per Box
HK12137	Set 13 Hex L-wrenches .050-3/8 - Long	5
HK12199	Set 9 Hex L-wrenches 1.5-10mm - Long	
HK12237	Set 13 Hex L-wrenches .050-3/8 - Short	
HK12299	Set 9 Hex L-wrenches 1.5-10mm - Short	

HEX END T-HANDLE SETS INCH & METRIC

Part Number	Description	Qty. Per Box
HK15238	Set 10 Hex T-handles 6" Length 3/32-3/8	1
HK15287	Set 8 Hex T-handles 6" Length 2-10mm	

HEX END SINGLE L-WRENCHES LONG INCH

Part Number	Description	Qty. Per Box
HK12102	.050 Hex L-key LA	50
HK12103	1/16 Hex L-key LA	
HK12104	5/64 Hex L-key LA	
HK12105	3/32 Hex L-key LA	
HK12106	7/64 Hex L-key LA	
HK12107	1/8 Hex L-key LA	
HK12108	9/64 Hex L-key LA	
HK12109	5/32 Hex L-key LA	
HK12110	3/16 Hex L-key LA	
HK12111	7/32 Hex L-key LA	25
HK12112	1/4 Hex L-key LA	
HK12113	5/16 Hex L-key LA	
HK12114	3/8 Hex L-key LA	
HK12115	7/16 Hex L-key LA	10
HK12116	1/2 Hex L-key LA	
HK12117	9/16 Hex L-key LA	5
HK12118	5/8 Hex L-key LA	
HK12119	3/4 Hex L-key LA	
HK12120	7/8 Hex L-key LA	
HK12121	1" Hex L-key LA	

HEX END SINGLE L-WRENCHES LONG METRIC

Part Number	Description	Qty. Per Box
HK12150	1.5mm Hex L-key LA	50
HK12152	2mm Hex L-key LA	
HK12154	2.5mm Hex L-key LA	
HK12156	3mm Hex L-key LA	
HK12160	4mm Hex L-key LA	
HK12164	5mm Hex L-key LA	
HK12168	6mm Hex L-key LA	25
HK12172	8mm Hex L-key LA	
HK12176	10mm Hex L-key LA	
HK12178	11mm Hex L-key LA	
HK12180	12mm Hex L-key LA	10
HK12184	14mm Hex L-key LA	5
HK12186	17mm Hex L-key LA	
HK12188	19mm Hex L-key LA	

HEX END T-HANDLE INCH

Part Number	Description	Qty. Per Box
HK15205	3/32 Hex T-Handle 6" Length	1
HK15206	7/64 Hex T-Handle 6" Length	
HK15207	1/8 Hex T-Handle 6" Length	
HK15208	9/64 Hex T-Handle 6" Length	
HK15209	5/32 Hex T-Handle 6" Length	
HK15210	3/16 Hex T-Handle 6" Length	
HK15211	7/32 Hex T-Handle 6" Length	
HK15212	1/4 Hex T-Handle 6" Length	
HK15213	5/16 Hex T-Handle 6" Length	
HK15214	3/8 Hex T-Handle 6" Length	

HEX END SINGLE L-WRENCHES SHORT INCH

Part Number	Description	Qty. Per Box
HK12200	.028 Hex L-key SA	50
HK12201	.035 Hex L-key SA	
HK12202	.050 Hex L-key SA	
HK12203	1/16 Hex L-key SA	
HK12204	5/64 Hex L-key SA	
HK12205	3/32 Hex L-key SA	
HK12206	7/64 Hex L-key SA	
HK12207	1/8 Hex L-key SA	
HK12208	9/64 Hex L-key SA	
HK12209	5/32 Hex L-key SA	
HK12210	3/16 Hex L-key SA	
HK12211	7/32 Hex L-key SA	25
HK12212	1/4 Hex L-key SA	
HK12213	5/16 Hex L-key SA	
HK12214	3/8 Hex L-key SA	
HK12215	7/16 Hex L-key SA	
HK12216	1/2 Hex L-key SA	
HK12217	9/16 Hex L-key SA	10
HK12218	5/8 Hex L-key SA	
HK12219	3/4 Hex L-key SA	5
HK12220	7/8 Hex L-key SA	
HK12221	1" Hex L-key SA	

HEX END SINGLE L-WRENCHES SHORT METRIC

Part Number	Description	Qty. Per Box
HK12250	1.5mm Hex L-key SA	50
HK12252	2mm Hex L-key SA	
HK12254	2.5mm Hex L-key SA	
HK12256	3mm Hex L-key SA	
HK12260	4mm Hex L-key SA	
HK12264	5mm Hex L-key SA	
HK12268	6mm Hex L-key SA	25
HK12272	8mm Hex L-key SA	
HK12276	10mm Hex L-key SA	
HK12278	11mm Hex L-key SA	
HK12280	12mm Hex L-key SA	
HK12284	14mm Hex L-key SA	10
HK12286	17mm Hex L-key SA	
HK12288	19mm Hex L-key SA	5

HEX END T-HANDLE METRIC

Part Number	Description	Qty. Per Box
HK15252	2mm Hex T-Handle 6" Length	1
HK15254	2.5mm Hex T-Handle 6" Length	
HK15256	3mm Hex T-Handle 6" Length	
HK15260	4mm Hex T-Handle 6" Length	
HK15264	5mm Hex T-Handle 6" Length	
HK15268	6mm Hex T-Handle 6" Length	
HK15272	8mm Hex T-Handle 6" Length	
HK15276	10mm Hex T-Handle 6" Length	

Socket Head Cap Screws



HEAT TREATED ALLOY STEEL TO PROPERTY CLASS 12.9
ISO METRIC THREADS TO ANSI B1.13M • ISO 4762 & ISO 898-1
HOLO-CODE TRACEABLE

Diameter	Length Under Head	Product Number Code	Approx. Wt. (lbs.) Per Box	Qty. Per Box
M2 Pitch .4 1.5mm Key	4	**76604**	0.1	100
	5	**76605**	0.1	
	6	**76606**	0.1	
	8	**76608**	0.1	
	10	**76610**	0.1	
	12	**76612**	0.1	
M2.5 Pitch .45 2.0mm Key	5	**76655**	0.1	100
	6	**76656**	0.1	
	8	**76658**	0.1	
	10	**76660**	0.1	
	12	**76662**	0.1	
M3 Pitch 0.50 2.5mm Key	5	**76004**	0.1	100
	6	**76008**	0.1	
	8	**76012**	0.2	
	10	**76016**	0.2	
	12	**76020**	0.2	
	15	**76026**	0.2	
	16	**76028**	0.2	
	20	**76032**	0.3	
	25	**76036**	0.3	
	30	**76040**	0.4	
	35	**76044**	0.5	
M4 Pitch 0.70 3mm Key	5	**76048**	0.3	100
	6	**76052**	0.3	
	8	**76056**	0.3	
	10	**76060**	0.4	
	12	**76064**	0.4	
	14	**76066**	0.5	
	15	**76068**	0.5	
	16	**76072**	0.5	
	20	**76076**	0.6	
	25	**76080**	0.7	
	30	**76084**	0.8	
	35	**76088**	0.9	
	40	**76092**	1.0	
	45	**76096**	1.0	
	50	**76100**	1.0	
M5 Pitch 0.80 4mm Key	6	**76102**	0.5	100
	8	**76104**	0.5	
	10	**76108**	0.6	
	12	**76112**	0.6	
	14	**76114**	0.7	
	15	**76118**	0.7	
	16	**76120**	0.7	
	18	**76122**	0.7	
	20	**76124**	0.7	
	22	**76126**	0.9	
	25	**76128**	0.9	
	30	**76132**	1.0	
	35	**76136**	1.4	
	40	**76140**	1.5	
	45	**76144**	1.7	
	50	**76148**	1.9	
	55	**76149**	2.0	
	60	**76150**	2.0	
	65	**76151**	3.0	
	70	**76147**	3.0	
	80	**76721**	3.0	
	90	**76722**	3.5	
	100	**76723**	3.8	

Diameter	Length Under Head	Product Number Code	Approx. Wt. (lbs.) Per Box	Qty. Per Box
M6 Pitch 1.00 5mm Key	8	**76152**	0.9	100
	10	**76156**	1.0	
	12	**76160**	1.0	
	14	**76162**	1.0	
	15	**76166**	1.0	
	16	**76168**	1.0	
	18	**76170**	1.2	
	20	**76172**	1.4	
	22	**76174**	1.5	
	25	**76176**	1.6	
	30	**76180**	1.8	
	35	**76184**	2.0	
	40	**76188**	2.4	
	45	**76192**	2.6	
	50	**76196**	2.9	
	55	**76200**	3.0	
	60	**76204**	3.0	
	65	**76208**	3.6	
	70	**76212**	3.8	
	75	**76216**	3.9	
	80	**76217**	4.0	
	90	**76218**	4.8	
	100	**76219**	5.0	
	110	**76215**	6.0	
M8 Pitch 1.25 6mm Key	10	**76220**	2.2	100
	12	**76224**	2.4	
	14	**76228**	2.5	
	15	**76230**	2.6	
	16	**76232**	2.8	
	18	**76234**	2.9	
	20	**76236**	3.0	
	22	**76238**	3.2	
	25	**76240**	3.4	
	30	**76244**	3.7	
	35	**76248**	4.0	
	40	**76252**	4.6	
	45	**76256**	5.0	
	50	**76260**	5.5	
	55	**76264**	5.9	
	60	**76268**	6.0	
	65	**76272**	6.8	
	70	**76276**	7.2	
	75	**76280**	7.6	
	80	**76279**	8.0	
	90	**76281**	9.0	
	100	**76282**	10.0	
	110	**76283**	10.7	
	120	**76278**	11.6	
	130	**76730**	12.8	
	140	**76734**	13.8	
	150	**76738**	14.9	
M10 Pitch 1.50 8mm Key	10	**76286**	4.0	100
	12	**76284**	4.0	
	15	**76290**	4.6	
	16	**76292**	4.6	
	18	**76294**	4.9	
	20	**76296**	5.0	
	22	**76298**	5.4	
	25	**76300**	5.7	
	30	**76304**	6.1	

Socket Head Cap Screws Cont.



HEAT TREATED ALLOY STEEL TO PROPERTY CLASS 12.9
ISO METRIC THREADS TO ANSI B1.13M • ISO 4762 & ISO 898-1
HOLO-CODE TRACEABLE

Diameter	Length Under Head	Product Number Code	Approx. Wt. (lbs.) Per Box	Qty. Per Box
M10 (Cont.)	35	**76308**	6.8	100
	40	**76312**	7.5	
	45	**76316**	8	
	50	**76320**	8.8	
	55	**76324**	9.6	
	60	**76328**	5.1	50
	65	**76332**	5.4	
	70	**76336**	5.8	
	75	**76340**	6.1	
	80	**76344**	6.4	
	90	**76348**	7.1	
	100	**76352**	7.8	
	110	**76353**	8.5	
	120	**76357**	9.0	
	130	**76354**	9.9	
	140	**76358**	10.7	
	150	**76355**	11.2	
	220	**760004512**	3.2	10
	240	**760004520**	3.5	
	260	**760004528**	3.8	
	280	**760004536**	4.1	
	300	**760004544**	4.3	
M12 Pitch 1.75 10mm Key	12	**76780**	6.4	100
	15	**76782**	6.7	
	16	**76784**	6.9	
	20	**76356**	7.0	
	25	**76360**	7.8	
	30	**76364**	8.6	
	35	**76368**	9.4	
	40	**76372**	5.2	50
	45	**76376**	5.7	
	50	**76380**	6.1	
	55	**76384**	6.6	
	60	**76388**	7.1	
	65	**76392**	7.6	
	70	**76396**	8.1	
	75	**76400**	8.6	
	80	**76404**	9.0	25
	90	**76408**	5.0	
	100	**76412**	5.5	
	110	**76416**	6.0	
	120	**76420**	6.4	
	130	**76421**	6.9	
	140	**76418**	7.5	
	150	**76422**	3.2	10
	160	**76419**	3.4	
	170	**76791**	3.6	
	180	**76792**	3.8	
	190	**76793**	4.0	
	200	**76794**	4.2	
	220	**760004614**	4.6	
	240	**760004622**	5.0	
	260	**760004630**	5.4	
	280	**760004638**	5.8	
	300	**760004646**	6.2	

Diameter	Length Under Head	Product Number Code	Approx. Wt. (lbs.) Per Box	Qty. Per Box
M14 Pitch 2.00 12mm Key	20MM	**76820**	2.9	25
	25MM	**76822**	3.2	
	30MM	**76824**	3.5	
	35MM	**76826**	3.7	
	40MM	**76830**	4.0	
	45MM	**76832**	4.3	
	50MM	**76834**	4.5	
	55MM	**76836**	4.8	
	60MM	**76838**	5.3	
	65MM	**76840**	5.6	
	70MM	**76842**	6.0	
	75MM	**76844**	6.3	
	80MM	**76846**	6.7	
	85MM	**76848**	70	
	90MM	**76850**	7.3	
	100MM	**76852**	8.0	
	110MM	**76854**	3.5	10
	120MM	**76856**	3.8	
M16 Pitch 2.00 14mm Key	25	**76423**	4.2	25
	30	**76424**	4.2	
	35	**76428**	4.8	
	40	**76432**	5.0	
	45	**76436**	5.3	
	50	**76440**	5.8	
	55	**76444**	6.2	
	60	**76448**	6.7	
	65	**76452**	7.1	
	70	**76456**	7.5	
	75	**76460**	8.0	
	80	**76464**	8.5	
	90	**76468**	9.3	
	100	**76472**	4.0	10
	110	**76476**	4.4	
	120	**76480**	4.7	
	130	**76478**	5.1	
	140	**76479**	5.5	
	150	**76481**	5.8	
	160	**76482**	6.0	
	180	**76483**	6.2	
	200	**760004840**	7.7	
	220	**760004848**	8.4	
	240	**760004856**	9.1	
	260	**760004864**	9.8	
	280	**760004868**	10.5	
	300	**760004872**	11.2	

Socket Head Cap Screws Cont.



HEAT TREATED ALLOY STEEL TO PROPERTY CLASS 12.9
ISO METRIC THREADS TO ANSI B1.13M • ISO 4762 & ISO 898-1
HOLO-CODE TRACEABLE

Diameter	Length Under Head	Product Number Code	Approx. Wt. (lbs.) Per Box	Qty. Per Box
M20 Pitch 2.50 17mm Key	30	**76800**	16.0	25
	35	**76804**	3.2	10
	40	**76484**	3.2	
	45	**76488**	3.5	
	50	**76492**	3.8	
	55	**76496**	4.0	
	60	**76500**	4.3	
	65	**76504**	4.5	
	70	**76508**	4.8	
	75	**76512**	5.1	
	80	**76516**	5.4	
	90	**76520**	5.9	
	100	**76524**	6.4	
	110	**76528**	7.0	
	120	**76532**	7.6	
	130	**76536**	8.1	
	140	**76537**	8.7	
	150	**76540**	9.2	
	160	**76541**	9.7	
	180	**76542**	9.9	
	200	**76543**	12.0	
	220	**760005432**	1.5	1
	240	**760005434**	1.6	
	260	**760005436**	1.7	
	280	**760005438**	1.8	
	300	**760005440**	1.9	
M24 Pitch 3.00 19mm Key	40	**76808**	15.5	25
	50	**76544**	6.9	10
	55	**76810**	7.3	
	60	**76548**	7.6	
	65	**76552**	7.9	
	70	**76556**	8.2	
	75	**760005600**	8.5	
	80	**76560**	8.9	
	90	**76564**	9.6	
	100	**76568**	10.7	
	110	**76569**	11.5	
	120	**76572**	12.3	
	130	**76573**	13	
	140	**76574**	13.8	
	150	**76576**	7.3	5
	160	**76577**	7.7	
	180	**76578**	8.5	
	200	**76579**	9.3	
	220	**76580**	10.1	
	240	**76581**	2.3	1
	260	**76583**	2.4	
	280	**760005808**	2.6	
	300	**760005809**	2.8	

Diameter	Length Under Head	Product Number Code	Approx. Wt. (lbs.) Per Box	Qty. Per Box
M30 Pitch 3.5 22mm Key	50	**760005825**	1.3	1
	60	**760005826**	1.4	
	70	**760005828**	1.5	
	80	**76584**	1.6	
	90	**76585**	1.7	
	100	**76586**	1.8	
	110	**76587**	1.9	
	120	**76592**	2.1	
	130	**76588**	2.2	
	140	**76593**	2.3	
	150	**76589**	2.5	
	160	**76594**	2.6	
	180	**76590**	2.9	
	200	**76591**	3.1	
	220	**76595**	3.4	
	240	**76596**	3.6	
	260	**760005970**	3.9	
	280	**760005975**	4.1	
	300	**76598**	4.3	
	320	**760005990**	4.6	
	340	**760005992**	4.8	
	360	**760005994**	5.1	
	380	**760005996**	5.3	
	420	**760005998**	5.8	
M36 Pitch 4 27mm Key	80	**76900**	2.6	1
	90	**76902**	2.7	
	100	**76906**	2.8	
	110	**76910**	3.0	
	120	**76914**	3.3	
	130	**76918**	3.4	
	140	**76922**	3.6	
	150	**76926**	3.8	
	160	**76930**	4.0	
	170	**76934**	4.2	
	180	**76938**	4.4	
	200	**76942**	4.7	
	220	**760009640**	5.0	
	240	**76946**	5.4	
	260	**76950**	5.8	
	280	**760009646**	6.1	
	300	**760009650**	6.4	
	340	**760009660**	7.1	
	360	**760009700**	7.4	
	380	**760009740**	7.8	
	400	**760009780**	8.1	
	420	**760009820**	8.5	
	440	**760009860**	8.9	
	460	**760009880**	9.3	
	480	**760009940**	9.5	
	520	**760009980**	10.3	
	540	**760009984**	10.6	
	560	**760009985**	10.9	
	580	**760009988**	11.2	
	600	**760009990**	11.6	
	640	**760009994**	12.3	
	650	**760009995**	12.5	

Socket Low Head Cap Screws



ISO METRIC THREADS TO ANSI B1.13M
HEAT TREATED TO PROPERTY CLASS 10.9

Diameter	Length Under Head	Product Number Code	Approx. Weight per Box (lbs.)	Qty. Per Box
M4 Pitch 0.70 3 mm Key Head Height 2.8	8	**69304**	0.4	100
	10	**69308**	0.4	
	12	**69312**	0.4	
	15	**69316**	0.5	
	16	**69320**	0.5	
	18	**69329**	0.5	
	20	**69328**	0.6	
	25	**69332**	0.7	
	30	**69336**	0.7	
M5 Pitch 0.80 4 mm Key Head Height 3.5	8	**69350**	0.7	100
	10	**69354**	0.7	
	12	**69358**	0.8	
	16	**69370**	0.9	
	20	**69374**	0.9	
	25	**69378**	1.1	
	30	**69382**	1.2	
M6 Pitch 1.00 5 mm Key Head Height 4.0	8	**69390**	0.9	100
	10	**69394**	0.9	
	12	**69398**	1.0	
	14	**69402**	1.1	
	15	**69406**	1.1	
	16	**69410**	1.2	
	20	**69414**	1.3	
	25	**69418**	1.6	
	30	**69422**	1.7	
	35	**69426**	2.1	
	40	**69430**	2.3	
	45	**69434**	2.5	
	50	**69438**	2.8	
M8 Pitch 1.25 6 mm Key Head Height 5.0	12	**69450**	2.1	100
	15	**69455**	2.2	
	16	**69458**	2.3	
	20	**69462**	2.6	
	25	**69466**	3.0	
	30	**69472**	3.3	

Diameter	Length Under Head	Product Number Code	Approx. Weight per Box (lbs.)	Qty. Per Box
M8 (Cont.)	35	**69476**	3.7	100
	40	**69480**	4.2	
	45	**69484**	2.5	50
	50	**69488**	2.6	
	60	**69492**	3.0	
M10 Pitch 1.50 8 mm Key Head Height 6.5	15	**69501**	4.0	100
	16	**69504**	4.0	
	20	**69508**	4.3	
	25	**69512**	4.9	
	30	**69516**	5.5	
	35	**69520**	3.1	50
	40	**69524**	3.3	
	45	**69528**	3.7	
	50	**69532**	4.1	
	55	**69536**	4.4	
	60	**69540**	4.7	
	70	**69544**	5.4	
M12 Pitch 1.75 10 mm Key Head Height 8.0	20	**69550**	3.2	50
	25	**69554**	3.7	
	30	**69558**	4.1	
	35	**69562**	4.4	
	40	**69566**	2.4	25
	45	**69570**	2.6	
	50	**69574**	2.9	
	60	**69578**	3.4	
	80	**69582**	4.5	
	100	**69586**	5.5	
M16 Pitch 2.00 12 mm Key Head Height 10.0	30	**69590**	1.7	10
	35	**69594**	1.9	
	40	**69598**	2.0	
	45	**69602**	2.1	
	50	**69606**	2.3	
	60	**69610**	2.6	
	70	**69614**	3.0	
	90	**69618**	3.7	
	100	**69622**	4.1	

Socket Head Cap Screws



STAINLESS STEEL
ISO 4762 • ISO 3506-1 • CLASS A2-70

Diameter	Length Under Head	Product Number Code	Approx. Weight per Box (lbs.)	Qty. Per Box
M3 Pitch 0.50 2.5mm Key	5	**770305005**	0.2	100
	6	**77004**	0.1	
	8	**77008**	0.2	
	10	**77012**	0.2	
	12	**77016**	0.2	
	16	**77020**	0.2	
	20	**770305020**	0.3	
	25	**770305025**	0.4	
	30	**770305030**	0.4	
	35	**770305035**	0.5	

Diameter	Length Under Head	Product Number Code	Approx. Weight per Box (lbs.)	Qty. Per Box
M4 Pitch 0.70 3mm Key	5	**770407005**	0.3	100
	6	**770407006**	0.3	
	8	**77044**	0.3	
	10	**77048**	0.4	
	12	**77052**	0.4	
	14	**770407014**	0.5	
	16	**77056**	0.5	
	20	**77060**	0.6	
	25	**77064**	0.7	
	30	**77068**	0.8	
	32	**77070**	0.9	
	35	**770407035**	0.9	
	40	**770407040**	1.0	
	45	**770407045**	1.1	
	50	**770407050**	1.2	

Socket Head Cap Screws Cont.



STAINLESS STEEL
ISO 4762 • ISO 3506-1 • CLASS A2-70

Diameter	Length Under Head	Product Number Code	Approx. Weight per Box (lbs.)	Qty. Per Box
M5 Pitch 0.80 4mm Key	6	**770508006**	0.6	100
	8	**770508008**	0.6	
	10	**77084**	0.6	
	12	**77088**	0.6	
	14	**770508014**	0.8	
	16	**77092**	0.7	
	20	**77096**	0.7	
	22	**77098**	0.8	
	25	**77100**	0.9	
	30	**77104**	1.0	
	35	**77108**	1.4	
	40	**77110**	1.5	
	45	**770508045**	1.8	
	50	**770508050**	2.0	
	55	**770508055**	2.1	
	60	**770508060**	2.3	
	65	**770508065**	2.5	
	70	**770508070**	2.6	
	80	**770508080**	3.2	
	90	**770508090**	3.3	

Diameter	Length Under Head	Product Number Code	Approx. Weight per Box (lbs.)	Qty. Per Box
M6 Pitch 1.00 5mm Key	8	**770610008**	1.0	100
	10	**770610010**	1.1	
	12	**77124**	1.0	
	16	**77128**	1.2	
	18	**770610018**	1.4	
	20	**77132**	1.4	
	22	**77134**	1.5	
	25	**77136**	1.6	
	30	**77140**	1.8	
	35	**770610035**	2.2	
	40	**770610040**	2.4	
	45	**770610045**	2.6	
	50	**770610050**	2.9	
	55	**770610055**	3.1	
	60	**770610060**	3.4	
	65	**770610065**	3.5	
	70	**770610070**	3.7	
	75	**770610075**	4.1	
	80	**770610080**	4.3	
	90	**770610090**	4.8	
	100	**770610100**	5.3	
	110	**770610110**	5.8	

Socket Flat Head Cap Screws



HEAT TREATED ALLOY STEEL ISO 10642 PROPERTY CLASS 12.9*
METRIC THREADS TO ANSI B1.13M

* Because of their head configurations, those may not meet the minimum ultimate tensile load specified in ISO 898-1 for property class 12.9.

Diameter	Length Overall	Product Number Code	Approx. Weight per Box (lbs.)	Qty. Per Box
M3 Pitch 0.50 2mm Key	6	**87003**	0.1	100
	8	**87004**	0.1	
	10	**87008**	0.1	
	12	**87012**	0.1	
	15	**87014**	0.1	
	16	**87016**	0.1	
	20	**87020**	0.2	
	25	**87021**	0.3	
	30	**87022**	0.3	
M4 Pitch 0.70 2.55mm Key	8	**87024**	0.2	100
	10	**87028**	0.2	
	12	**87032**	0.3	
	15	**87034**	0.3	
	16	**87036**	0.3	
	18	**87038**	0.5	
	20	**87040**	0.4	
	25	**87044**	0.5	
	30	**87048**	0.6	
	35	**87049**	0.7	
	40	**87050**	0.9	
M5 Pitch 0.80 3mm Key	8	**87052**	0.3	100
	10	**87056**	0.4	
	12	**87060**	0.4	
	15	**87062**	0.5	
	16	**87064**	0.5	
	18	**87066**	0.6	
	20	**87068**	0.7	

Diameter	Length Overall	Product Number Code	Approx. Weight per Box (lbs.)	Qty. Per Box
M5 (Cont.)	25	**87072**	0.8	100
	30	**87076**	0.9	
	35	**87077**	1.3	
	40	**87078**	1.4	
	45	**87080**	1.6	
	50	**87079**	1.8	
M6 Pitch 1.00 4mm Key	10	**87084**	0.6	100
	12	**87088**	0.7	
	15	**87090**	0.8	
	16	**87092**	0.8	
	18	**87094**	0.9	
	20	**87096**	1.0	
	25	**87100**	1.1	
	30	**87104**	1.3	
	35	**87108**	1.5	
	40	**87112**	1.7	
	45	**87113**	2.1	
	50	**87114**	2.5	
	60	**87115**	2.8	
M8 Pitch 1.25 5mm Key	15	**87122**	1.5	100
	16	**87124**	1.6	
	20	**87128**	1.9	
	25	**87132**	2.2	
	30	**87136**	2.5	
	35	**87140**	2.9	
	40	**87144**	3.2	

Socket Flat Head Cap Screws Cont.



* Because of their head configurations, those may not meet the minimum ultimate tensile load specified in ISO 898-1 for property class 12.9.

HEAT TREATED ALLOY STEEL ISO 10642 PROPERTY CLASS 12.9*
METRIC THREADS TO ANSI B1.13M

Diameter	Length Overall	Product Number Code	Approx. Weight per Box (lbs.)	Qty. Per Box
M8 (Cont.)	45	**87143**	3.9	100
	50	**87145**	4.4	
	55	**87148**	4.8	
	60	**87146**	5.5	
	70	**87147**	6.6	
M10 Pitch 1.50 6mm Key	15	**87151**	2.5	100
	16	**87149**	2.6	
	20	**87152**	3.1	
	25	**87156**	3.6	
	30	**87160**	3.1	
	35	**87164**	4.6	
	40	**87168**	5.2	
	45	**87172**	6.4	
	50	**87176**	7.0	
	55	**87173**	7.6	
	60	**87177**	8.0	
	70	**87178**	4.6	50
	80	**87174**	5.5	
	90	**87175**	6.0	
	100	**87179**	6.9	

Diameter	Length Overall	Product Number Code	Approx. Weight per Box (lbs.)	Qty. Per Box
M12 Pitch 1.75 8mm Key	20	**87180**	4.6	100
	25	**87184**	5.4	
	30	**87188**	6.2	
	35	**87192**	7.0	
	40	**87196**	7.8	
	45	**87200**	4.7	50
	50	**87204**	5.0	
	55	**87205**	5.4	
	60	**87206**	5.8	
	70	**87198**	7.0	
	80	**87201**	8.0	
	90	**87202**	9.0	
	100	**87203**	10.0	
M16 Pitch 2.00 10mm Key	30	**87207**	5.6	50
	35	**87208**	6.4	
	40	**87212**	3.5	25
	45	**87213**	4.2	
	50	**87216**	4.3	
	55	**87218**	4.9	
	60	**87220**	5.0	
	70	**87221**	6.3	

Socket Button Head Cap Screws



HEAT TREATED ALLOY STEEL
ISO 7380 PROPERTY CLASS 12.9* METRIC THREADS TO ANSI B1.13M

Diameter	Length Under Head	Product Number Code	Approx. Weight per Box (lbs.)	Qty. Per Box
M3 Pitch 0.50 2mm Key	6	**86002**	0.1	100
	8	**86001**	0.1	
	10	**86003**	0.1	
	12	**86005**	0.2	
	14	**86004**	0.2	
	16	**86006**	0.2	
M4 Pitch 0.70 2.55mm Key	8	**86007**	0.3	100
	10	**86009**	0.3	
	12	**86011**	0.3	
	15	**86012**	0.4	
	16	**86013**	0.4	
M5 Pitch 0.80 3mm Key	10	**86015**	0.5	100
	12	**86017**	0.5	
	15	**86018**	0.6	
	16	**86019**	0.6	
	20	**86021**	0.8	
	25	**86023**	0.9	
	30	**86025**	1.0	
M6 Pitch 1.00 4mm Key	10	**86027**	0.7	100
	12	**86029**	0.7	
	15	**86030**	0.8	
	16	**86031**	0.9	
	18	**86032**	1.0	
	20	**86033**	1.1	
	22	**86034**	1.2	
	25	**86035**	1.2	
	30	**86037**	1.6	

Diameter	Length Under Head	Product Number Code	Approx. Weight per Box (lbs.)	Qty. Per Box
M8 Pitch 1.25 5mm Key	10	**86039**	1.0	100
	12	**86041**	1.2	
	15	**86042**	1.5	
	16	**86043**	1.5	
	18	**86044**	1.7	
	20	**86045**	1.9	
	25	**86047**	2.3	
	30	**86049**	2.8	
	35	**86050**	3.2	
	40	**86051**	3.6	
M10 Pitch 1.50 6mm Key	15	**86052**	3.0	100
	16	**86053**	3.2	
	20	**86055**	3.7	
	25	**86057**	4.2	
	30	**86059**	4.3	
	35	**86060**	4.7	
	40	**86061**	5.0	
M12 Pitch 1.75 8mm Key	16	**86062**	4.4	100
	20	**86063**	5.1	
	25	**86065**	5.9	
	30	**86070**	3.3	50
	35	**86075**	3.7	
	40	**86080**	4.1	
	50	**86085**	4.9	

* Because of their head configurations, those may not meet the minimum ultimate tensile load specified in ISO 898-1 for property class 12.9.

Socket Shoulder Screws



HEAT TREATED ALLOY STEEL • ISO 7379*** PROPERTY CLASS 12.9*
METRIC THREADS TO ANSI B1.13M

Diameter	Shoulder Length	Thread Diameter	Product Number Code	Approx. Weight per Box (lbs.)	Qty. Per Box
6mm 3mm KEY (6.000) (5.982)	10	M5	**09002**	0.4	25
	12		**09001**	0.4	
	15		**09104**	0.41	
	16		**09003**	0.4	
	20		**09005**	0.5	
	25		**09110**	0.5	
	30		**09114**	0.59	
	40		**09118**	0.71	
8mm 4mm KEY (8.000) (7.978)	12	M6	**09006**	0.7	25
	15		**09124**	0.76	
	16		**09007**	0.8	
	20		**09009**	0.9	
	25		**09011**	1.0	
	30		**09013**	1.1	
	40		**09015**	1.3	
	50		**09132**	1.52	
10mm 5mm KEY (10.000) (9.978)	15	M8	**09144**	1.4	25
	16		**09016**	1.4	
	20		**09017**	1.5	
	25		**09019**	1.7	
	30		**09021**	1.8	
	40		**09023**	2.2	
	50		**09025**	2.6	
	60		**09027**	2.9	
	70		**09029**	3.2	
	80		**09031**	3.5	

Diameter	Shoulder Length	Thread Diameter	Product Number Code	Approx. Weight per Box (lbs.)	Qty. Per Box
12mm 6 mm KEY (12.000) (11.973)	15	M10	**09156**	2.0	25
	16		**09032**	2.1	
	20		**09033**	2.3	
	25		**09035**	2.5	
	30		**09037**	2.8	
	40		**09039**	3.3	
	50		**09041**	3.8	
	60		**09043**	4.2	
	70		**09045**	4.7	
	80		**09046**	5.2	
	90		**09160**	5.7	
	100		**09164**	6.2	
16mm 8mm KEY (16.000) (15.973)	30	M12	**09047**	5.2	25
	40		**09048**	6.3	
	50		**09049**	6.9	
	60		**09050**	8.0	
	70		**09051**	8.7	
	80		**09052**	9.8	
	90		**09053**	4.3	10
	100		**09055**	4.5	
	120		**09054**	5.3	

* Because of their configuration these cannot be subject to tensile testing
*** Except shoulder dia to be h8

Dowel Pins Black Lustre Finish



RUST RESISTANT • .0051MM OVER LISTED DIAMETER • MEETS ASME/ANSI B18.8.5M

Diameter	Length Overall	Product Number Code	Approx. Weight per Box (lbs.)	Qty. in Box
3mm	8	**02001**	0.1	100
	10	**02003**	0.1	
	12	**02005**	0.2	
	16	**02007**	0.2	
	20	**02009**	0.3	
	25	**02011**	0.3	
	30	**02013**	0.4	
4mm	10	**02015**	0.2	100
	12	**02017**	0.3	
	16	**02019**	0.4	
	20	**02021**	0.5	
	25	**02023**	0.6	
	30	**02025**	0.7	
	35	**02027**	0.8	
5mm	12	**02029**	0.5	100
	16	**02031**	0.6	
	20	**02033**	0.7	
	25	**02035**	0.9	
	30	**02037**	1.1	
	35	**02039**	1.3	
	40	**02041**	1.4	

Diameter	Length Overall	Product Number Code	Approx. Weight per Box (lbs.)	Qty. in Box
5mm (Cont.)	45	**02043**	1.6	100
	50	**02045**	1.8	
6mm	16	**02047**	0.8	100
	20	**02049**	1.0	
	25	**02051**	0.8	
	30	**02053**	1.2	
	35	**02055**	1.7	
	40	**02057**	1.9	
	45	**02059**	2.2	
	50	**02061**	2.4	
	60	**02063**	2.9	
8mm	16	**02065**	1.4	100
	20	**02067**	1.7	
	25	**02069**	2.2	
	30	**02071**	2.4	
	35	**02073**	2.9	
	40	**02075**	3.3	
	45	**02077**	4.0	
	50	**02079**	4.2	
	60	**02081**	5.4	
	70	**02083**	6.3	



Dowel Pins
Black Lustre Finish Cont.

RUST RESISTANT • .0051MM OVER LISTED DIAMETER • MEETS ASME/ANSI B18.8.5M

Diameter	Length Overall	Product Number Code	Approx. Weight per Box (lbs.)	Qty. in Box
10mm	20	**02085**	2.6	100
	25	**02087**	3.3	
	30	**02089**	4.0	
	35	**02091**	4.6	
	40	**02093**	5.3	
	45	**02095**	2.5	40
	50	**02097**	2.8	
	60	**02099**	3.2	
	70	**02101**	3.8	
	80	**02103**	4.4	
	90	**02105**	4.8	
12mm	25	**02107**	2.1	40
	30	**02109**	2.4	
	35	**02111**	2.6	
	40	**02113**	3.1	
	45	**02115**	3.5	
	50	**02117**	3.9	
	60	**02119**	2.3	20
	70	**02121**	2.7	
	80	**02123**	3.2	
	90	**02125**	3.6	
	100	**02127**	3.8	

Diameter	Length Overall	Product Number Code	Approx. Weight per Box (lbs.)	Qty. in Box
16mm	30	**02131**	1.0	10
	35	**02133**	1.2	
	40	**02135**	1.4	
	45	**02137**	1.6	
	50	**02139**	1.7	
	60	**02141**	2.1	
	70	**02143**	2.4	
	80	**02145**	2.7	
	90	**02147**	3.1	
	100	**02149**	3.5	
20mm	50	**02151**	2.7	10
	60	**02153**	3.2	
	70	**02155**	3.7	
	80	**02157**	4.3	
	90	**02159**	4.9	
	100	**02161**	5.4	
	110	**02163**	5.9	
	120	**02165**	6.5	
	130	**02167**	7.0	
	140	**02169**	7.6	



Socket Head Cap Screws Zinc and Clear Chromate

DECORATIVE FLASH PLATE
MEETS ASME/ANSI B18.3 and ASTM A574 Before Plate

Diameter	Length Under Head	Product Number Code		Approx. Weight per Box (lbs.)	Qty. in Box
		UNRC	UNRF		
#4 (.112") UNRC 40 3/32" Key	1/4"	**ZP1C72018**	-	0.2	100
	3/8"	**ZP1C72020**	-	0.2	
	1/2"	**ZP1C72022**	-	0.3	
	5/8"	**ZP1C72024**	-	0.3	
	3/4"	**ZP1C72026**	-	0.3	
	1"	**ZP1C86176**	-	0.3	
#6 (.138") UNRC 32 7/64" Key	1/4"	**ZP1C72038**	-	0.3	100
	5/16"	**ZP1C72039**	-	0.3	
	3/8"	**ZP1C72040**	-	0.3	
	1/2"	**ZP1C72042**	-	0.3	
	5/8"	**ZP1C72044**	-	0.4	
	3/4"	**ZP1C72046**	-	0.4	
	7/8"	**ZP1C72048**	-	0.4	
	1"	**ZP1C72050**	-	0.5	
#8 (.164") UNRC 32 9/64" Key	1/4"	**ZP1C72052**	-	0.5	100
	3/8"	**ZP1C72054**	-	0.4	
	1/2"	**ZP1C72056**	-	0.5	
	5/8"	**ZP1C72058**	-	0.5	
	3/4"	**ZP1C72060**	-	0.6	
	1"	**ZP1C72064**	-	0.7	
	1-1/4"	**ZP1C72066**	-	0.8	
	1-1/2"	**ZP1C72068**	-	0.9	
#10 (.190") 5/32" Key UNRC 24 UNRF 32	3/8"	**ZP1C72070**	**ZP1C73034**	1.1	100
	1/2"	**ZP1C72072**	**ZP1C73036**	0.6	
	5/8"	**ZP1C72074**	**ZP1C73038**	0.7	
	3/4"	**ZP1C72076**	**ZP1C73040**	0.8	
	7/8"	-	**ZP1C73042**	0.9	
	1"	**ZP1C72080**	**ZP1C73044**	0.9	
	1-1/4"	**ZP1C72082**	**ZP1C73046**	1.0	
	1-1/2"	**ZP1C72084**	**ZP1C73048**	1.3	
	2	-	**ZP1C73052**	1.4	
1/4" (.250") UNRC 20 3/16" Key	1/4"	**ZP1C86526**	-	1.9	100
	3/8"	**ZP1C72090**	-	0.8	
	1/2"	**ZP1C72092**	-	1.0	
	5/8"	**ZP1C72094**	-	1.2	
	3/4"	**ZP1C72096**	-	1.3	
	7/8"	**ZP1C72098**	-	1.5	
	1"	**ZP1C72100**	-	1.6	
	1-1/4"	**ZP1C72102**	-	1.8	
	1-1/2"	**ZP1C72104**	-	2.1	
	1-3/4"	**ZP1C72106**	-	2.5	
	2"	**ZP1C72108**	-	2.9	
	2-1/4"	**ZP1C72110**	-	3.0	
	2-1/2"	**ZP1C72112**	-	3.4	
	3"	**ZP1C72116**	-	3.8	
	4"	**ZP1C72115**	-	4.0	

Diameter	Length Under Head	Product Number Code		Approx. Wt. (Lbs.) Per Box	Qty. in Box
		UNRC	UNRF		
5/16" (.312") UNRC 18 1/4" Key	1/2"	**ZP1C72120**	-	2.0	100
	5/8"	**ZP1C72122**	-	2.3	
	3/4"	**ZP1C72124**	-	2.5	
	7/8"	**ZP1C72126**	-	2.7	
	1"	**ZP1C72128**	-	2.9	
	1-1/4"	**ZP1C72130**	-	3.4	
	1-1/2"	**ZP1C72132**	-	3.9	
	1-3/4"	**ZP1C72134**	-	4.4	
	2"	**ZP1C72136**	-	4.9	
	2-1/4"	**ZP1C72138**	-	5.4	
	2-1/2"	**ZP1C72140**	-	5.9	
	3"	**ZP1C72144**	-	6.9	
	3-1/2"	**ZP1C72148**	-	3.9	50
	4"	**ZP1C86646**	-	4.5	
3/8" (.375") UNRC 16 5/16" Key	1/2"	**ZP1C72150**	-	3.4	100
	3/4"	**ZP1C72154**	-	4.0	
	7/8"	**ZP1C72156**	-	4.3	
	1"	**ZP1C72158**	-	4.6	
	1-1/4"	**ZP1C72160**	-	5.2	
	1-1/2"	**ZP1C72162**	-	6.0	
	2"	**ZP1C72166**	-	3.9	50
	2-1/4"	**ZP1C72168**	-	4.3	
	2-1/2"	**ZP1C72170**	-	4.5	
	3"	**ZP1C72174**	-	5.1	
	4"	**ZP1C72180**	-	6.6	
1/2" (.500") UNRC 13 3/8" Key	1"	**ZP1C72226**	-	4.8	50
	1-1/4"	**ZP1C72228**	-	5.3	
	1-1/2"	**ZP1C72230**	-	6.3	
	2"	**ZP1C72234**	-	7.4	
	2-1/2"	**ZP1C72238**	-	4.4	25
	3"	**ZP1C72242**	-	4.9	
	4"	**ZP1C72248**	-	6.3	
	4-1/2"	**ZP1C72250**	-	7.0	
5/8" (.625") UNRC 11 1/2" Key	1-1/4"	**ZP1C72266**	-	4.8	25
	1-1/2"	**ZP1C72268**	-	5.3	
	2"	**ZP1C72272**	-	6.0	
	2-1/2"	**ZP1C72276**	-	7.3	
	3"	**ZP1C72280**	-	8.4	
	4"	**ZP1C72286**	-	10.5	

Socket Head Cap Screws with Nylon Patch



MEETS ASME/ANSI B18.3 AND ASTM A574 • IFI 124 • UNRC COARSE THREAD SERIES

Diameter	Length Under Head	Product Number Code	Approx. Weight per Box (lbs.)	Qty. in Box
#2 UNRC 56	3/16"	PATCH72002	0.1	100
	1/4"	PATCH72004	0.1	
	3/8"	PATCH72006	0.1	
	1/2"	PATCH72008	0.1	
#4 UNRC 40	1/4"	PATCH72018	0.1	100
	5/16"	PATCH86154	0.1	
	3/8"	PATCH72020	0.1	
	1/2"	PATCH72022	0.2	
	5/8"	PATCH72024	0.2	
	3/4"	PATCH72026	0.2	
	1"	PATCH86176	0.3	
#6 UNRC 32	1/4"	PATCH72038	0.2	100
	3/8"	PATCH72040	0.3	
	1/2"	PATCH72042	0.3	
	3/4"	PATCH72046	0.3	
#8 UNRC 32	3/8"	PATCH72054	0.4	100
	1/2"	PATCH72056	0.4	
	3/4"	PATCH72060	0.5	
	1"	PATCH72064	0.6	
#10 UNRC 24	3/8"	PATCH72070	0.5	100
	1/2"	PATCH72072	0.6	
	3/4"	PATCH72076	0.7	
	1 "	PATCH72080	0.8	
1/4" UNRC 20	3/8"	PATCH72090	0.9	100
	1/2"	PATCH72092	1.1	
	5/8"	PATCH72094	1.2	
	3/4"	PATCH72096	1.3	
	7/8"	PATCH72098	1.4	
	1"	PATCH72100	1.6	
	1 1/4"	PATCH72102	1.8	
	1 1/2"	PATCH72104	2.2	
	2"	PATCH72108	2.8	
	3"	PATCH72116	4.1	

Diameter	Length Under Head	Product Number Code	Approx. Weight per Box (lbs.)	Qty. in Box
5/16" UNRC 18	1/2"	PATCH72120	1.9	100
	5/8"	PATCH72122	2.1	
	3/4"	PATCH72124	2.3	
	7/8"	PATCH72126	2.5	
	1"	PATCH72128	2.7	
	1 1/4"	PATCH72130	3.1	
	1 1/2"	PATCH72132	3.5	
	1 3/4"	PATCH72134	4.1	
	2"	PATCH72136	4.5	
	2 1/2"	PATCH72140	5.5	
	3"	PATCH72144	6.5	
3/8" UNRC 16	3/4"	PATCH72154	3.7	100
	1"	PATCH72158	4.3	
	1 1/4"	PATCH72160	4.9	
	1 1/2"	PATCH72162	5.4	
	2"	PATCH72166	3.4	50
	2 1/2"	PATCH72170	4.2	
7/16" UNRC 14	1"	PATCH72194	6.2	100
	1 1/4"	PATCH72196	3.5	50
1/2" UNRC 13	3/4"	PATCH72222	4.1	50
	1"	PATCH72226	4.6	
	1 1/4"	PATCH72228	5.1	
	1 1/2"	PATCH72230	5.7	
	1 3/4"	PATCH72232	6.2	
	2"	PATCH72234	6.7	
	2 1/2"	PATCH72238	4.1	25
	3"	PATCH72242	4.8	
5/8" UNRC 11	1"	PATCH72264	4.3	25
	1 1/4"	PATCH72266	4.7	
	1 1/2"	PATCH72268	5.1	
	1 3/4"	PATCH72270	5.6	
	2 "	PATCH72272	6.0	
	2 1/2"	PATCH72276	7.1	
	3"	PATCH72280	8.0	

MEETS ASME/ANSI B18.3 AND ASTM A574 • IFI 124 • UNRF FINE THREAD SERIES

Diameter	Length Under Head	Product Number Code	Approx. Weight per Box (lbs.)	Qty. in Box
#10 UNRF 32	3/8"	PATCH73034	0.5	100
	1/2"	PATCH73036	0.6	
	5/8"	PATCH73038	0.7	
	3/4"	PATCH73040	0.7	
	7/8"	PATCH73042	0.8	
	1"	PATCH73044	0.9	
	1 1/4"	PATCH73046	1.1	
	1 1/2"	PATCH73048	1.3	
1/4" UNRF 28	3/8"	PATCH73054	1.0	100
	1/2"	PATCH73056	1.1	
	5/8"	PATCH73058	1.3	
	3/4"	PATCH73060	1.4	
	7/8"	PATCH73062	1.5	
	1"	PATCH73064	1.7	
	1 1/4"	PATCH73066	1.9	
	1 1/2"	PATCH73068	2.4	

Diameter	Length Under Head	Product Number Code	Approx. Weight per Box (lbs.)	Qty. in Box
5/16" UNRF 24	1/2"	PATCH73076	2.0	100
	3/4"	PATCH73080	2.4	
	1"	PATCH73084	2.8	
	1 1/4"	PATCH73086	3.2	
	1 1/2"	PATCH73088	3.8	
3/8" UNRF 24	1/2"	PATCH73098	3.6	100
	3/4"	PATCH73102	4.3	
	1"	PATCH73106	4.7	
	1 1/4"	PATCH73108	5.4	
	1 1/2"	PATCH73110	6.0	
1/2" UNRF 20	1"	PATCH73130	4.8	50
	1 1/2"	PATCH73134	5.9	

CALL FOR AVAILABILITY

Dimension Standards

Hex Key Fit Selector - Keys Fit These Products

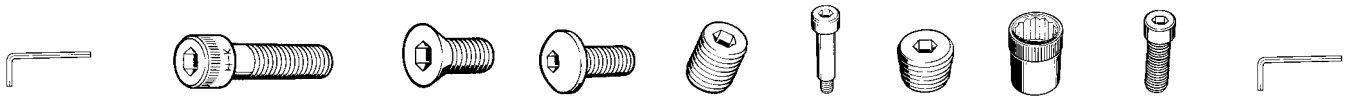

Nominal Key Size, Inches	Socket Head Cap Screws		Flat Head Cap Screws	Button Head Cap Screws	Set Screws	Shoulder Screws	Pressure Plugs	Allenuts	Low Head Cap Screws	Nominal Key Size, Inches
	1960 Series	1936 Series								
.028	-	-	-	-	0	-	-	-	-	.028
.035	-	-	0	0	1,2	-	-	-	-	.035
.050	0	0,1	1,3	1,3	3,4	-	-	-	4	.050
1/16	1	2	3,4	3,4	5,6	-	-	-	5,6	1/16
5/64	2,3	3,4	5,6	5,6	8	-	-	-	8	5/64
3/32	4,5	5,6	8	8	10	-	-	-	10	3/32
7/64	6	-	-	-	-	-	-	-	-	7/64
1/8	-	8	10	10	1/4	1/4	-	4,5	1/4	1/8
9/64	8	10	-	-	-	-	-	-	-	9/64
5/32	10	1/4	1/4	1/4	5/16	5/16	1/16	6	5/16	5/32
3/16	1/4	-	5/16	5/16	3/8	3/8	1/8	8,10	3/8	3/16
7/32	-	5/16	3/8	3/8	7/16	-	-	-	7/16	7/32
1/4	5/16	-	7/16	-	1/2	1/2	1/4	1/4	1/2	1/4
5/16	3/8	3/8, 7/16	1/2	-	5/8	5/8	3/8	5/16	5/8	5/16
3/8	7/16, 1/2	1/2	5/8	-	3/4	3/4	1/2	3/8	-	3/8
7/16	-	-	-	-	-	-	-	7/16	-	7/16
1/2	5/8	5/8	3/4	-	7/8	1	-	1/2	-	1/2
9/16	-	3/4, 7/8	7/8	-	1, 1-1/8	-	3/4	-	-	9/16
5/8	3/4	1	1	-	1-1/4, 1-3/8	1-1/4	1	5/8	-	5/8
3/4	7/8, 1		1-1/8	-	1-1/2	-	1-1/4	3/4	-	3/4
7/8	1-1/8, 1-1/4	-	1-1/4, 1-3/8	-	-	1-1/2	-	7/8	-	7/8
1	1-3/8, 1-1/2	1-1/2	1-1/2	-	1-3/4, 2	1-3/4	1-1/2, 2	1	-	1
1-1/4	1-3/4	-	-	-	-	2	-	1-1/4	-	1-1/4
1-1/2	2	1-1/8, 1-1/4, 1-3/8	-	-	-	-	-	1-1/2	-	1-1/2
1-3/4	2-1/4, 2-1/2	-	-	-	-	-	-	-	-	1-3/4
2	-3/4	-	-	-	-	-	-	-	-	2

Hex Key Fit Selector - Keys Fit These Products

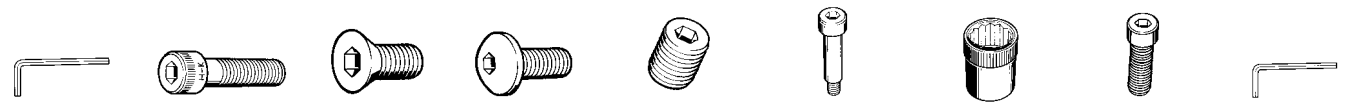

Nominal Key Size, MM	Socket Head Cap Screws	Flat Head Cap Screws	Button Head Cap Screws	Set Screws	Shoulder Screws	Allenuts	Low Head Cap Screws	Nominal Key Size, MM
0.7	-	-	-	M1.4, M1.6, M1.7	-	-	-	0.7
0.9	-	-	-	M2,M2.3	-	-	-	0.9
1.3	M1.4	-	-	M2.5, M2.6	-	-	-	1.3
1.5	M1.6, M1.7, M2	-	-	M3	-	-	-	1.5
2	M2.3, M2.5, M2.6	M3	M3	M4	-	-	-	2
2.5	M3	M4	M4	M5	-	-	-	2.5
3	M4	M5	M5	M6	6mm	M3	M4	3
4	M5	M6	M6	M8	8mm	M4	M5	4
5	M6	M8	M8	M10	10mm	M6	M6	5
6	M8	M10	M10	M12, M14	12mm	M6	M8	6
8	M10	M12	M12	M16	16mm	M8	M10	8
10	M12	M14, M16	-	M20	20mm	M10	M12	10
12	M14	M20	-	M24		M12	M14	12
14	M16	-	-	-		-	M16	14
17	M20	-	-	-		M16	M20, M22	17
19	M24	-	-	-		-	M24	19

Assortments

Set Screw and Key Assortments

Precision tolerances, heat treated alloy steel, black finish



Item No.
56880
Set No.
602

705 Pc. SAE Set Screw and Hex Key Assortment

An assortment of 11 sizes of SAE alloy steel socket set screws with a cup point and the appropriate short arm hex keys in a sectioned metal Box. Contains 590 set screws and 115 hex keys. Box size: 9-3/4" x 13-3/4" x 2-1/2". Weight: 9.3 lbs.

Assortment Contents:

Set Screw Size	Quantity
#10-32 X 3/16	100
#10-32 X 1/4	50
1/4-20 X 1/4	100
1/4-20 X 3/8	50
5/16-18 X 5/16	100
5/16-18 X 3/8	50

Set Screw Size	Quantity
3/8-16 X 3/8	50
3/8-16 X 1/2	
7/16-14 X 7/16	20
1/2-13 X 1/2	10
5/8-11 X 5/18	

Hex Key Size	Quantity
3/32	25
1/8	
5/32	
3/16	
7/32	5
1/4	
5/16	



Item No.
56884
Set No.
608

145 Pc. SAE Set Screw and Hex Key Assortment

An assortment of 10 sizes of SAE alloy steel socket set screws with a cup point and the appropriate short arm hex keys in a sectioned plastic box. Contains 100 set screws and 45 hex keys. Box size: 8-3/8" x 4-1/2" x 1-1/2". Weight: 1.3 lbs.

Assortment Contents:

Set Screw Size	Quantity
#8-32 X 3/16	10
#8-32 X 1/4	
#10-32 X 3/16	
#10-32 X 1/4	
1/4-20 X 1/4	

Set Screw Size	Quantity
1/4-20 X 3/8	10
5/16-18 X 5/16	
5/16-18 X 3/8	
3/8-16 X 3/8	
3/8-16 X 1/2	

Hex Key Size	Quantity
5/64	10
3/32	
1/8	
5/32	
3/16	5

Assortments

Set Screw and Key Assortments

Precision tolerances, heat treated alloy steel, black finish



Item No.
56410

170 Pc. SAE Cap Screw Set

An assortment of 12 sizes of SAE alloy steel socket head cap screws in a 12 section plastic box. Box size: 10-3/4" x 6-3/4" x 1-7/8".
Weight 3.7 lbs.

Assortment Contents

Cap Screw Size	Quantity
#6-32 X 1/2	20
#8-32 X 1/2	
1/4-20 X 1/2	10
1/4-20 X 3/4	
1/4-20 X 1	
5/16-18 X 1	

Cap Screw Size	Quantity
5/16-18 X 1-1/2	10
3/8-16 X 1	
3/8-16 X 1-1/2	
#10-32 X 1/2	20
#10-32 X 3/4	
#10-32 X 1	



Item No.
56420

300 Pc. SAE Button Head Cap Screw Set

An assortment of 12 sizes of SAE alloy steel button head cap screws in a 12 section plastic box. Box size: 10-3/4" x 6-3/4" x 1-7/8". Weight: 3.7 lbs.

Assortment Contents

Button Head Size	Quantity
#6-32 X 3/8	25
#6-32 X 1/2	
#8-32 X 3/8	
#8-32 X 1/2	
1/4-20 X 1/2	
1/4-20 X 3/4	

Button Head Size	Quantity
1/4-20 X 1	25
5/16-18 X 3/4	
5/16-18 X 1	
#10-32 X 3/8	
#10-32 X 1/2	
#10-32 X 3/4	



Item No.
56430

300 Pc. SAE Flat Head Cap Screw Set

An assortment of 12 sizes of SAE alloy steel flat head cap screws in a 12 section plastic box. Box size: 10-3/4" x 6-3/4" x 1-7/8". Weight: 3.4 lbs.

Assortment Contents

Flat Head Size	Quantity
#6-32 X 3/8	25
#6-32 X 1/2	
#8-32 X 3/8	
#8-32 X 1/2	
1/4-20 X 1/2	
1/4-20 X 3/4	

Flat Head Size	Quantity
1/4-20 X 1	25
5/16-18 X 3/4	
5/16-18 X 1	
#10-32 X 3/8	
#10-32 X 1/2	
#10-32 X 3/4	

Assortments

Cap Screw, Set Screw and Key Assortment

Precision tolerances, heat treated alloy steel, black finish



Item No. 56886
Set No. 621

336 Pc. SAE Set Screw and Hex Key Assortment

An assortment of 24 numbered size alloy steel socket set screws with a cup point and the appropriate short arm hex keys in a sectioned metal box. Contains 288 set screws and 48 hex keys. Box size: 8-1/2" x 5-3/4" x 1". Weight: 1.3 lbs.

Assortment Contents:

Set Screw Size	Quantity
#4-40 X 1/8	12
#4-40 X 3/16	
#4-40 X 1/4	
#4-40 X 5/16	
#4-40 X 3/8	
#5-40 X 1/8	
#5-40 X 3/16	
#5-40 X 1/4	
#5-40 X 5/16	
#5-40 X 3/8	
#6-32 X 1/8	
#6-32 X 3/16	

Set Screw Size	Quantity
#6-32 X 1/4	12
#6-32 X 5/16	
#6-32 X 3/8	
#8-32 X 1/8	
#8-32 X 3/16	
#8-32 X 1/4	
#8-32 X 5/16	
#8-32 X 3/8	
#10-24 X 3/16	
#10-24 X 1/4	
#10-24 X 5/16	
#10-24 X 3/8	

Hex Key Size	Quantity
.050	12
1/16	
5/64	
3/32	



Item No. 56438

300 Pc. SAE Holo-Knurl® Point Screw Set

An assortment of 12 sizes of SAE alloy steel socket set screws with a Holo-Knurl® point in a 12 section plastic box. Box size: 10-3/4" x 6-3/4" x 1-7/8". Weight: 2.3 lbs.

Assortment Contents:

Set Screw Size	Quantity
#8-32 X 1/4	25
#10-32 X 3/16	
#10-32 X 1/4	
1/4-20 X 1/4	
1/4-20 X 3/8	
1/4-20 X 1/2	

Set Screw Size	Quantity
1/4-28 X 1/4	25
5/16-18 X 3/8	
5/16-18 X 1/2	
3/8-16 X 3/8	
3/8-16 X 1/2	
1/2-13 X 1/2	



Item No. 76582
Set No. MK2

274 Pc. Metric Cap Screw and Hex Key Assortment

An assortment of 18 sizes of alloy steel metric socket head cap screws and the appropriate short arm hex keys in a sectioned plastic box. Contains 270 cap screws and 4 hex keys. Box size: 11" x 6-3/4" x 1-3/4". Weight: 5 lbs.

Assortment Contents:

Cap Screw Size	Quantity
M4 X 10MM	25
M4 X 12MM	
M4 X 20MM	
M4 X 25MM	
M5 X 12MM	
M5 X 20MM	
M5 X 25MM	10
M5 X 30MM	
M6 X 12MM	

Cap Screw Size	Quantity
M6 X 20MM	10
M6 X 25MM	
M6 X 30MM	
M6 X 40MM	
M8 X 20MM	
M8 X 25MM	
M8 X 30MM	
M8 X 40MM	
M8 X 45MM	

Hex Key Size	Quantity
3MM	1
4MM	
5MM	
6MM	

Definitions of Screw and Thread Terms

Major Diameter - The largest diameter of the thread of the screw or nut. The term "major diameter" replaces the term "outside diameter" as applied to the thread of a screw and also the term full diameter as applied to the thread of a nut.

Minor Diameter - The smallest diameter of the thread of a screw or nut. The term "minor diameter" replaces the term "core diameter" as applied to the thread of a screw and also the term "inside diameter" as applied to the thread of a nut.

Half Angle of Thread - The angle included between a side of the thread and the normal to the axis, measured in an axial plane.

Angle of Thread - The angle included between the sides of the thread measured in an axial plane.

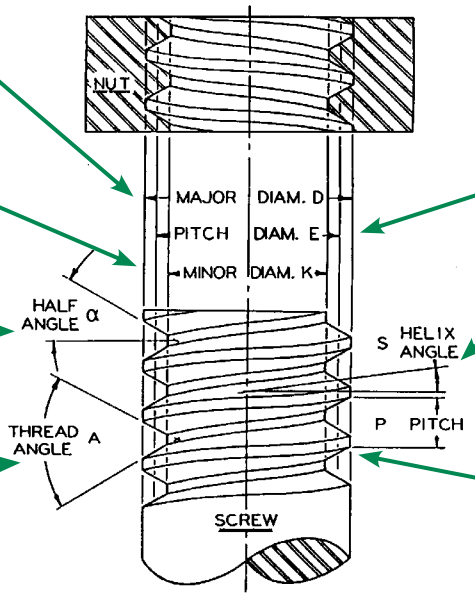

Pitch Diameter - On a straight screw thread, the diameter of an imaginary cylinder, the surface of which would pass through the threads at such points as to make equal the width of the threads and the width of the spaces cut by the surface of the cylinder. On a taper screw thread, the diameter, at a given distance from a reference plane perpendicular to the axis of an imaginary cone, the surface of which would pass through the threads at such points as to make equal the width of the threads and the width of the spaces cut by the surface of the cone.

Helix Angle - The angle made by the helix, or conical spiral, of the thread at the pitch diameter with a plane perpendicular to the axis.

Screw Thread - A ridge or uniform section in the form of a helix on the external or internal surface of a cylinder, or in the form of a conical spiral on the external or internal surface of a cone.

Root - The surface of the thread corresponding to the minor diameter of the screw and the major diameter of the nut .

Side or Flank - The surface of the thread which connects the crest with the root.

Pitch Line - An element of the imaginary cylinder or cone as specified under "Pitch Diameter".

Axis of a Screw - The longitudinal central line through the screw.

Crest - The surface of the thread corresponding to the major diameter of the screw and the minor diameter of the nut.

Depth of Thread - The distance between the crest and the base of the thread measured normal to the axis.

Base of Thread - The bottom section of the thread; the greatest section between the two adjacent roots.

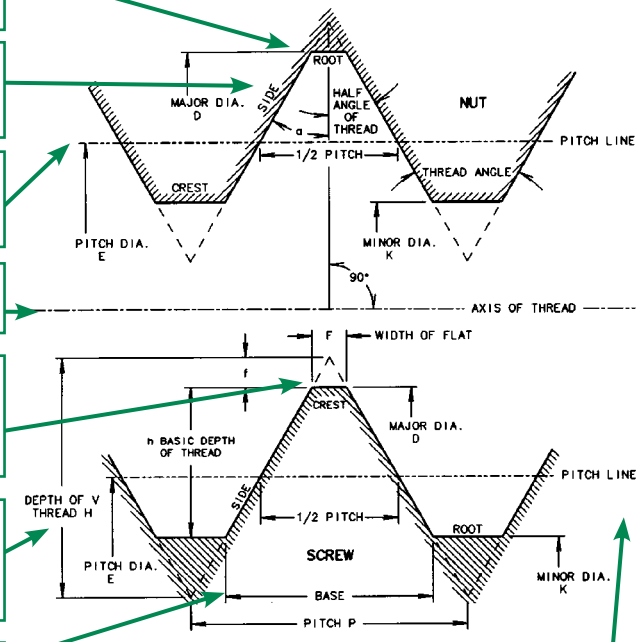

Thickness of Thread (1/2 of pitch) - The distance between the adjacent sides of the thread measured along or parallel to the pitch line.

Pitch - the distance from a point on a screw thread to a corresponding point on the next thread measured parallel to the axis.

The pitch in inches - $\frac{1}{\text{Number of threads per inch}}$

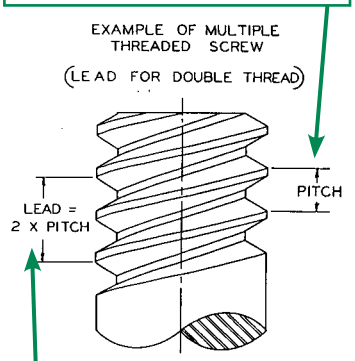

Lead - The distance a screw thread advances axially in one turn. On a single threaded screw the lead and pitch are identical; on a double threaded screw the lead is two times the pitch; on a triple threaded screw the lead is three times the pitch, etc.

Internal Thread ex. a nut - An internal thread is a thread on the inside of a member.

External Thread ex. a bolt - An external thread is a thread on the outside of a member.

Number of Threads - The number of threads in one inch of length.

Length of Engagement - The length of contact between two mated threaded parts measured axially.

Depth of Engagement - The depth of thread contact of two mated parts, measured radially.

Mean Area - The term "mean area of a screw," when used in specifications and for other purposes, designates the cross-sectional area computed from the mean of the basic pitch and minor diamters.

Terms Relating to Classification and Tolerances

Allowance - An intentional difference in the dimensions of mating parts. It is the minimum clearance of the maximum interference which is intended between mating parts. It represents the condition of the tightest permissible fit, or the largest internal member mated with the smallest external member.

Examples:
A 1/2-13 American National Coarse Thread.

Minimum pitch diameter of nut (2B). 0.4500
Maximum pitch diameter of screw (2A) 4485

Allowance (positive) 0.0015

Tolerance - The amount of variation permitted in the size of a part.

Example:
1/2 - 13, 3A American National Coarse Thread Series.

Maximum pitch diameter 0.4500
Minimum pitch diameter 4463

Tolerance. 0.0037

Basic Size - The theoretical or nominal standard size from which all variations are made.

Crest Clearance - Defined on a screw form as the space between the crest of a thread and the root of its mating part.

Finish - The character of the surface on a screw thread or other product.

Fit - The relation between two mating parts with reference to the conditions of a assembly. For example: Wrench fit; close fit; medium fit; free fit; loose fit. The quality of fit is dependent upon both the relative size and the quality of finish of the mating parts.

Neutral Zone - A positive allowance (See "Allowance.")

Limits - The extreme permissible dimensions of a part.

Example :
1/2-13, Class 3A, American National Coarse Thread Series.

The limits are:

Maximum pitch diameter (3A) 0.4500
Minimum pitch diameter (3A) 0.4463

Recommended Torque Specification*

Inch & Metric Fastener Charts



Socket Head Cap Screws				
Inch			Metric	
Nominal Size	Tightening Torque (Inch - lbs)		Nominal Size	Tightening Torque (N•m)
	UNRC	UNRF		
0	-	2.6	M1.6	0.34
1	4.5	4.8	M2	0.69
2	7.5	8.0	M2.5	1.43
3	11.0	12.0	M3	2.48
4	16.0	18.0	M4	5.85
5	24.0	24.0	M5	12.0
6	30.0	34.0	M6	20.3
8	55.0	58.0	M8	48.8
10	79.0	90.0	M10	97.5
1/4	200.0	230.0	M12	165.0
5/16	415.0	460.0	M14	265.0
3/8	740.0	845.0	M16	413.0
7/16	1,190.0	1,305.0	M20	825.0
1/2	1,800.0	2,065.0	M24	1,425.0
5/8	3,400.0	3,800.0	M30	2,775.0
3/4	6,000.0	6,750.0	M36	4,875.0
7/8	8,250.0	9,200.0		
1	12,500.0	13,000.0		
1-1/4	25,000.0	27,750.0		
1-1/2	43,500.0	49,000.0		



Button Head Socket Cap Screws			
Inch		Metric	
Nominal Size	Tightening Torque (Inch - lbs)	Nominal Size	Tightening Torque (N•m)
4	8	M3 x 0.5	1.25
5	-	M4 x 0.7	2.9
6	15	M5 x 0.8	5.9
8	30	M6 x 1	10.0
10	65	M8 x 1.25	24.0
1/4	125	M10 x 1.5	48.0
516	200	M12 x 1.75	84.0
3/8	360	M16 x 2	207.0
1/2	1000	M20 x 2.5	-
5/8	1750		

NOTE: This specification is for Holo-Krome® alloy steel fasteners with thermal black finish and light oil.



Flat Head Socket Cap Screws			
Inch		Metric	
Nominal Size	Tightening Torque (Inch - lbs)	Nominal Size	Tightening Torque (N•m)
4	9.5	M3 x 0.5	1.85
5	14.0	M4 x 0.7	3.4
6	18.0	M5 x 0.8	6.9
8	32.0	M6 x 1	12.0
10	75.0	M8 x 1.25	28.0
1/4	140.0	M10 x 1.5	56.0
5/16	245.0	M12 x 1.75	99.0
3/8	400.0	M16 x 2	246.0
7/16	600.0	M20 x 2.5	400.0
1/2	1,200.0		
5/8	2,000.0		
3/4	4,000.0		
7/8	6,000.0		
1	8,500.0		



Socket Should Bolts			
Inch		Metric	
Nominal Size	Tightening Torque (Inch - lbs)	Nominal Size	Tightening Torque (N•m)
1/4	50	M5 x 0.8	6.9
5/16	125	M6 x 1	12.0
3/8	265	M8 x 1.25	28.0
1/2	470	M10 x 1.5	56.0
5/8	1,150	M12 x 1.75	99.0
3/4	2,000	M16 x 2	250.0
1	4,000	M20 x 2.5	400.0



Cup Point Set Screws			
Inch		Metric	
Nominal Size	Tightening Torque (Inch - lbs)	Nominal Size	Tightening Torque (N•m)
0	1.1	1.6	0.1
1	2.1	2.0	0.2
2	2.1	2.5	0.6
3	6.0	3.0	1.0
4	6.0	4.0	2.1
5	11.0	5.0	4.7
6	11.0	6.0	7.7
8	23.0	8.0	17.8
10	40.0	10.0	35.0
1/4	94.0	12.0	55.0
5/16	183.0	16.0	125.0
3/8	317.0	20.0	250.0
7/16	502.0	24.0	425.0
1/2	750.0		
5/8	1,460.0		
3/4	2,520.0		
7/8	5,750.0		
1	8,000.0		



Low Head Socket Cap Screws	
Inch	
Nominal Size	Tightening Torque (Inch - lbs)
4	5.0
5	9.5
6	9.5
8	19.0
10	30.0
1/4	75.0

Low Head Socket Cap Screws	
Inch	
Nominal Size	Tightening Torque (Inch - lbs)
5/16	150.0
3/8	275.0
7/16	425.0
1/2	600.0
5/8	1,300.0

* Suggested torque values were determined based on calculations in controlled conditions intended to produce desired preloads. Testing should be completed to confirm suitability for individual applications



HOLO-KROME® *can make* your tough shapes easier!

Manufacturing parts with unusual contour, strength and cost requirements often becomes uneconomical as material, labor and energy costs escalate. For many companies, HOLO-KROME® has become the economic design and manufacturing alternative. The key is metal forming versus metal removal. We have over 80 years of applied technology experience in forming metal solutions. For us, tough parts take shape just a little easier.



HOLO-KROME ADVANTAGES

- Technical Engineering Staff to Answer your Questions
- Same Day Shipping
- 98% Fill Rates
- Full Metric and SAE Line
- Cad Drawing Online
- Two Fully Automated Continuous Heat Treating Furnaces Totalling 2,400 lbs/hr. Capacity
- Three Semi-Automated Batch Furnace Systems

QUALITY CONTROL

- ISO 9001:2008
- Holo-Code Traceability
- Limited Raw Materials Suppliers to ensure tight chemistry
- ROHS Compliant
- QSLM Class 2 Approved
- DFARS Compliant
- A2LA

PRODUCTS

- **Bolts, Screws & Studs:** Hex Heads, Heavy Hex, Dog Points, Flange 12 pt Screws, and Single End, Double End, and Fully Threaded Studs
  According to: A193/A193M, A320/A320M, ANSI B18.2.1, DIN 931, 933, 960, & 961, A325/A325M, A490, A449, A354BD. SAE J429. and MORE
- **All Types of Socket Cap Screws**
  According to: ANSI B18.3, ISO 4762, ISO 898-1, A574, A193/A193M, A320/A320M, and MORE
- **Custom Headed Parts**

RAW MATERIALS

- **Carbon & Alloy Steel:** A193:B7, B7M, B16, A320/A320M:L7/L7M,1018, 1045, 4140/42, 4037, 4137, 4340, 8640, and MORE
- **Stainless Steel:** 302HQ/304L (18-8), 316/316L, A2/A4 (50/70/80), 410, B8/B8M, B6/B6X, 17-4, PH (H925/H950/H1025/H1075/H1100/H1150/DH1150), and MORE
- **Super Alloys:** Monel™ 400/K500

COATINGS

- **Electrolytic Coatings:** Zinc Plating, Nickel Plating, Chromium Plating, Copper Plating, Cadmium Plating
- **Chemical & Other Coatings:** Mn/Zn Phosphating, Electroless Nickel Plating, Geomet, Dacromet®, Molybdenum Disulphide, PTFE Product/Material Standards: ASTM, API, ANSI, ISO, DIN, NACE, SAE, IFI, and MORE

MACHINING & PART SIZE CAPABILITIES

Threading

- All Standard and Metric Thread Pitches (UNC, UNF, UNJ, Metric, Pipe)
- Rolled: up to 2" Diameter
- Right/Left Hand

Hot Upset Forging

- Hot Heading and Forging: up to 2" Diameter (M48) and 28" (720m) long

Cold Heading

Our 200,000 sq. ft. facility specializes in small to large, medium to high-volume parts, including:

- Specialty Shoulder Screws
- Large Head with Small Body Severe Upsets and Extrusions
- Custom Designed Parts and Exotic Configurations
- Semi-Special Manufactured Large Washer Heads
- Non-Standard Product with High Heads

Socket Cap Screws: #0-2" and M1.6 to M48
Socket Set Screws: #4 to 1 inch
Socket Shoulder Screws: 1/4 to ≤ and M6 to M16
Dowel Pins: 1/8" to 1" and 3mm to 20mm - Standard and oversize

Special Head Cap Screws:
Flat Head – #4 to 3/4" and M3 to M16
Button Head – #4 to 5/8" and M3 to M12
Low Head – #8 to 1/4" and M4 to M16



CUSTOM DESIGNED SOLUTIONS

HOLO-KROME® Company

Made in the USA products are used in a wide variety of market applications that demand high-quality, high-strength precision components. In addition to the standard product line of cap screws, socket shoulder bolts, dowel pins, socket jam screws, and socket pipe plugs, HOLO-KROME also manufactures semi-standards, specialty parts and cold-headed parts.

With emphasis on lower cost and higher productivity, more companies are looking to HOLO-KROME to solve assembly and "tough-to-manufacture" part problems. If there is a length, material, coating or other criteria you don't find on our website or in our catalog, we will supply a quotation.



Do you require screw machine parts that have:

- Two or more outside diameters?
- A recess or bore up to 2x diameter in depth?
- A requirement for special material?

Warm or cold heading may be a practical alternative. Shaping metal by controlled warm or cold forming yields inherently stronger parts. Material structure is controlled in ciritical stress reas, eliminating the possibility of tears that are so common with machined parts.

HOLO-KROME can shape various types of material - aluminum and brasses, austenitic and martensitic stainless, 4000 series alloy steels, all the way through H-11 and other tool steels - into difficult dimensions while retaining the metallurgically important property of grain flow.

Tough-to-manufacture parts can be produced at less cost than traditional methods. With little or no metal removal, savings in material normally justifies HOLO-KROME's heading process. Our vertically integrated manufacturing process encompasses many innovative secondary and finishing operations such as high-speed/proprietary machining, full capability contour grinding, and precision roll threading up to 2" diameter. Our finishing operations include a controlled-heat treating department. Most high-strength alloy parts are automatically conveyed through furnaces to ensure that specified metallurgical properties are achieved.

Contact us today for a quote on your tough-to-manufacture parts.



HOLO-KROME®

WHEN IT MATTERS MOST.™

HOLO-KROME has been providing superior-quality critical application fasteners since 1929, and now offers custom designed solutions of the same superior-quality – each product proudly made in the USA.

The Difference Is Easy To See



To learn more about HOLO-KROME and the products we provide, visit:

www.holo-krome.com

United States
61 Barnes Industrial Park North
Wallingford, CT 06492
Phone: 800.879.6205 • Fax: 203.284.7052
rfq@holo-krome.com
sales@holo-krome.com

Europe
Bunsenstraat 3
3316GC Dordrecht, Netherlands
Phone: +31 (0) 78 652 4145
Fax: +31 (0) 78 618 7818

Printed in the USA • 9702604HK
AS/09.14/ Holo-Krome General Catalog