Holder / No. 852



Vertical / 2-Pin

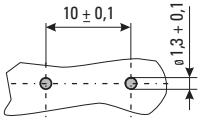

Holes in the printed circuit board: 1,3 +0,1

Cap / No. 855



Without silicon ring (IP 40)

Holder / No. 853



Cap / No. 856



With silicon ring (IP 54)
(from front side only)

PC Mount, Shocksafe 5x20mm Fuses

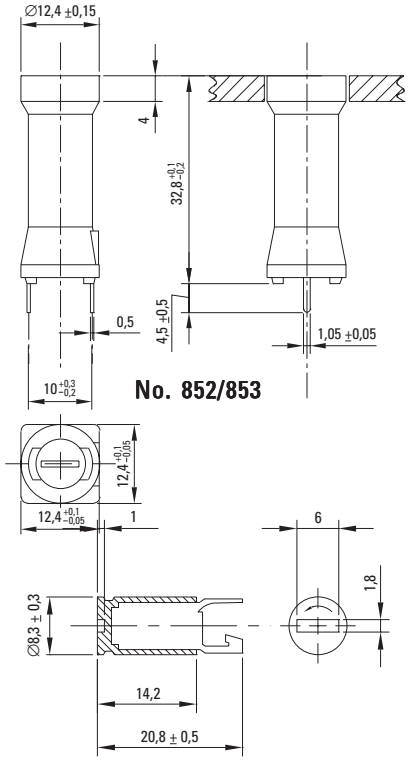

No. 852/853

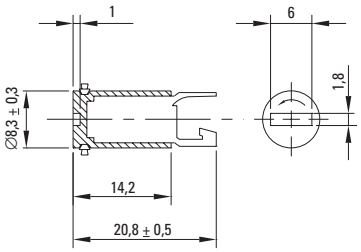

RoHS

Specifications

Standard
IEC 60127-6
UL 512
CSA C22.2. No.39

Approvals
VDE Report
SEMKO
UL Recognized
CSA
SEV

Mounting
(2) Solder pins 0.5mm x 1.1mm

Protection Class & Category
IP 40 (with Cap 855 acc. to IEC 60529)
IP 54 (with Cap 856 acc. to IEC 60529)
PC2 (IEC 60127-6)

Materials
Holder/Cap: Black Thermoplastic, UL 94V0
Sealing Ring: Silicon (Cap 856)
Metal Parts: Copper alloy, corrosion protected
Terminals: Solderable, tinned

Electrical Data (23°C)
Rated Voltage: 250V
Rated Current: 6.3A (VDE/SEMKO)
10A (CSA)
12A (UL)
Rated Power: 2W (VDE)

Operating Temperature
-40°C to +85°C (consider de-rating)

Climatic Test
-40°C/+85°C/21 days (IEC 60068-2-1...3)

Stock Conditions
+10°C to +60°C
relative humidity ≤ 75% yearly average,
without dew, maximum value for 30 days - 95%

Vibration Resistance
24 cycles at 15 min. each (IEC 60068-2-6)
10 - 60Hz at 0.75mm amplitude
60 - 500Hz at 10g acceleration

Contact Resistance
≤ 5mΩ

Impulse Voltage
4 kV, 50 Hz, 1 min., dry

Insulation Resistance
> 10^3 MΩ (500 VDC, 1 min.)

Solderability
235°C, 2 sec. (Wave)
350°C, 1 sec. (Soldering Iron)

Soldering Heat Resistance
350°C, 5 sec. (IEC 60068-2-20)

Minimum Cross Section
Conducting path - 0.2mm^2

Marking
Part No., 250V, Approvals

Unit Weight
3.2g (852) / 1.8g (855)
3.2g (853) / 1.9g (856)

Order Information

Packaging
Bulk (100 pcs.)

Order Numbers

Holder, IP 40	No. 852 0000 100
Cap, without Ring, IP 40	No. 855 0000 100
Holder, IP 54	No. 853 0000 100
Cap, with Ring, IP 54	No. 856 0000 100

Note: 1.00 means the number one with two decimal places. 1,000 means the number one thousand.

Specifications are subject to change without notice

WICKMANN

In our continuing strategy to deliver unparalleled circuit protection solutions, technical expertise and application leadership, we proudly introduce the WICKMANN Group and its products to the Littelfuse portfolio.