REVISIONS				
SYM	DESCRIPTION	REVISED BY	DATE	APPR

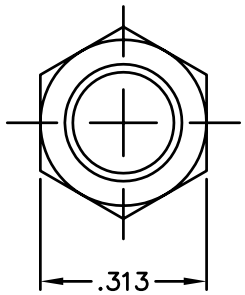

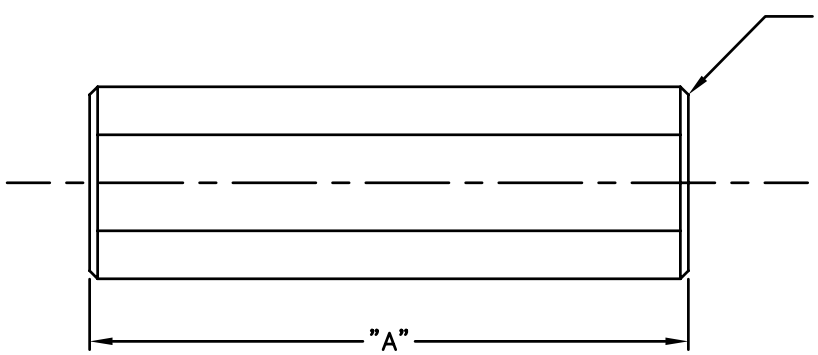

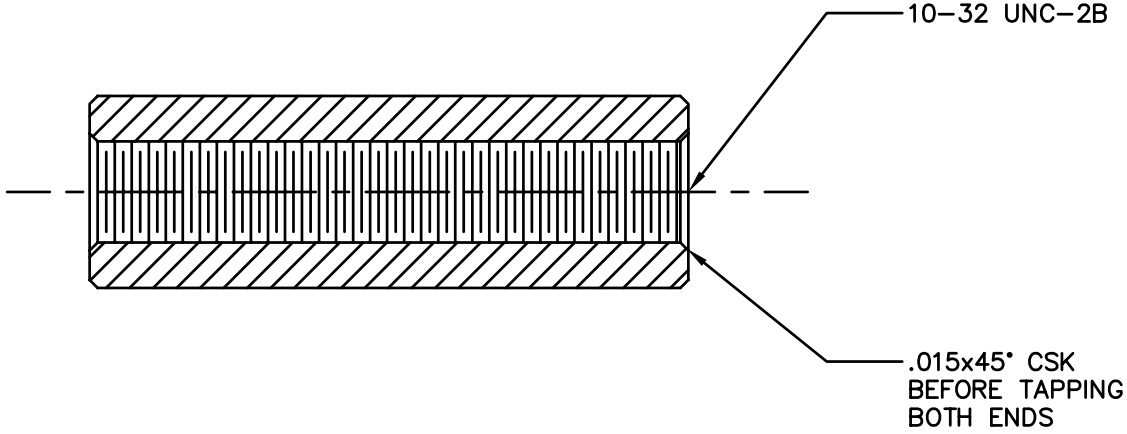

PART#	"A"
8460	.125
9305	.187
8461	.250
9306	.312
8462	.375
9307	.437
8463	.500
9308	.562
8464	.625
9309	.687
8465	.750
9310	.812
8466	.875
9311	.937
8467	1.000

MATERIAL: ALUMINUM 2011–T3 | FINISH: CLEAR CHROMATE | HEAT TREAT: ---

DIMENSIONAL TOLERANCES UNLESS OTHERWISE SPECIFIED

.XX	.XXX	.XXXX
---	---	---

FRACTIONS	ANGLES	SCALE
---	---	NONE

SURFACE FINISH 125

⌀ .002

TITLE: ALUMINUM HEX STANDOFF
10–32 THD– TAPPED THRU

DRAWN: T. LORD DATE: 12/16/05
CHECKED: T. LORD DATE: 12/16/05
APPROVED: T. LORD DATE: 12/16/05

THIS DRAWING AND THE INFORMATION THEREIN IS THE PROPERTY OF ABBATRON, LLC AND ALL UNAUTHORIZED USE OR REPRODUCTION THEREOF IS PROHIBITED.

ABBATRON
Electronic Connectors and Hardware
632 Arch Street, Meadville, Pa. 16335

SIZE	DRAWING NUMBER	ISSUE
A	SD: SMP-00448	B