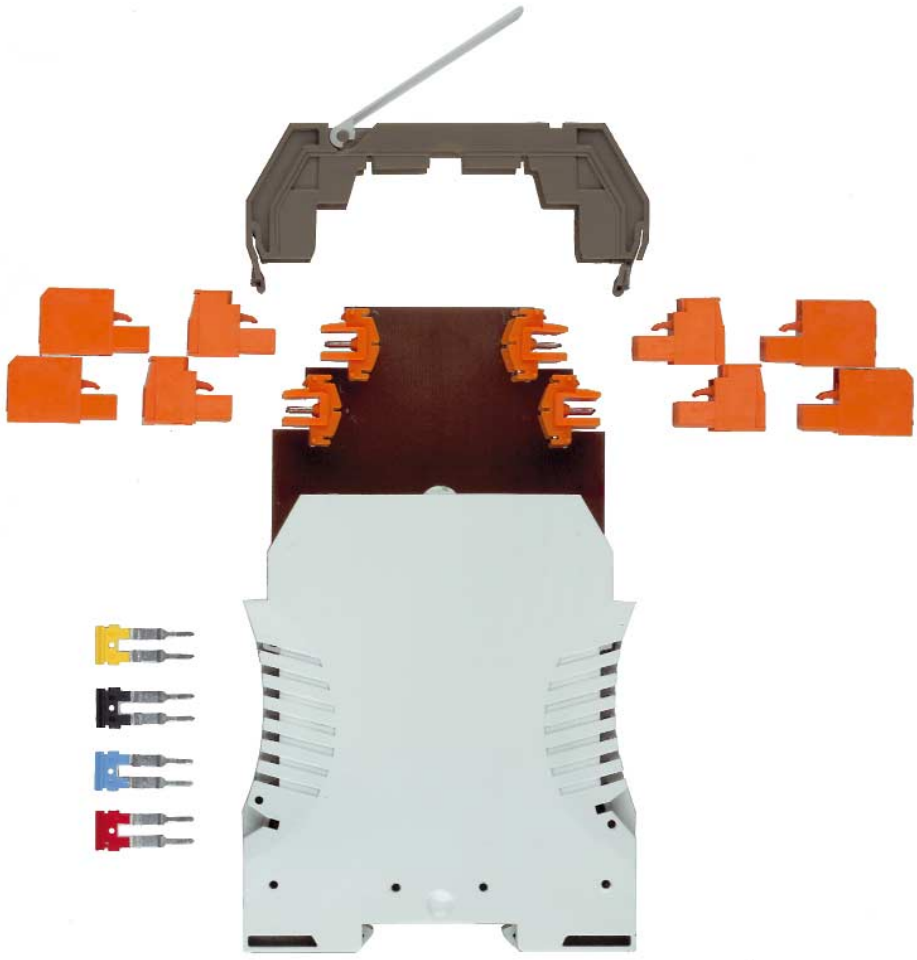

Weidmüller DK 4 and DKT 4 terminals

are suitable for the installation of electronic components with a maximum diameter or width of 4.5 mm. Four independent clamping yoke screw connections are available. A snap-on frame expands the installation space in the DK4 by 6 mm respectively. Depending on type, these modular terminals are suitable for mounting on TS 32, TS 35 x 7.5 or TS 35 x 15 mounting rails according to European standards EN 50 035 and EN 50 022.

Weidmüller WDK 2.5 terminals

are suitable for the installation of electrical components with a maximum width of 4 mm. As many as four independent clamping yoke screw connections or 4 6.3 x 0.8 tab connections are available. These terminals are suitable for mounting on TS 35 x 7.5 or TS 35 x 15 mounting rails.

Weidmüller EG 1 housings

offer 4 screw connections and, as accessories, up to 4 0.8 x 4.8 mm solder/tab connections on a width of 18 mm. The screw clamp busbar ends with a solder ring inside the housing. Two end plates seal the module. Depending on type, the modules are mounted on TS 32, TS 35 x 7.5 or TS 35 x 15 mounting rails.

Weidmüller EG 2 housings

The external shape of these housings corresponds to Type EG 1. Four screw connections or up to 8 0.8 x 6.6 mm/0.8 x 2.8 mm tab connectors are connected with a printed circuit board in the housing. They can be mounted on TS 32, TS 35 x 7.5 or TS 35 x 15 mounting rails.

Weidmüller EG 3 housings

provides 6 screw connections or 12 0.8 x 6.3 mm/0.8 x 2.8 mm tab connections on a width of 22.5 mm. As an accessory, Weidmüller offers a shaped printed circuit board with a 2.54 mm hole grid or fully copper-coated. The engagable combination foot allows the terminal to be mounted on TS 32, TS 35 x 7.5 or TS 35 x 15 mounting rails.
The MPL mounting plate is used to mount the housing directly (without mounting rail). Due to the sliding foot construction, the EG 3 can be turned through 180° in all types of assembly (e.g. exchanging input and output).

Weidmüller EG 4 housing

as type EG 3, offers the same width of 22.5 mm. However, the greater installation depth (75 mm) and height (109 mm) allow the installation of more complex circuit configurations. The built-in installation can be connected via 6 screw connections. The snap-on combination foot allows the terminal to be mounted on TS 32, TS 35 x 7.5 or TS 35 x 15 mounting rails. Due to the sliding foot construction, the EG 4 can be slid forwards or backwards on the locking foot, and can be turned through 180° (e.g. exchanging of input and output).

Weidmüller EG 5 housings

correspond to type EG 4. The EG 5 has 12 screw connections, which can be wired with solder lugs inside the housing. The snap-on combination foot allows the terminal to be mounted on TS 32, TS 35 x 7.5 or TS 35 x 15 mounting rails. Due to the sliding foot construction, the EG 4 can be slid 6 mm forwards or backwards on the engaging foot and can be turned through 180° (e.g. exchanging input and output).

Weidmüller EG 6 housings

have a bus-suitable contact carrier. The bus connection is created by directly mounting several housings in a row. 32 connections are available on both sides of the housing as crimp connector block contacts. The housing accepts printed circuit boards with dimensions of 100 x 120 mm. The printed circuit board is adapted with a VG 64 DIN strip. The front panel is screwed onto the circuit board similar to the 19" technology. The locking foot allows easy mounting onto the TS 35 mounting rail.

Weidmüller SEG/U housing

enable the plug-in module assembly of a 70 x 52 x 1 mm printed circuit board. The circuit board is attached to the accessory cover plate via snap-in hooks. The housing contains a 13-pole socket block for installation of the module; 6 screw connections are available for connection. The permissible power loss in the housing during continuous operation of terminals in rows amounts to 1.5W, depending on the surface temperature of the soldered components. The snap-on combination foot allows the housings to be mounted on TS 32, TS 35 x 7.5 or TS 35 x 15 mounting rails.

Weidmüller housings type WAVEBOX

It is essential to provide fit-for-use housings for modern electronic components. Setting and control functions must be easily carried out and technical requirements with respect to heat dissipation and EMV properties should be supported.
An ideal design saves space and wiring costs in the switchgear cabinet.
In addition, ergonomics and design are becoming increasingly important for high-quality electronic products.
These are the criteria that led to the development of WAVEBOX. Simplified production methods (shaft soldering, SMD) ensure cost-savings for the customer.
The WAVEBOX is characterised by:

- Optimum width for any application (12.5 mm, 17.5 mm, 22.5 mm)
- Large component assembly surface; SMDs can be mounted on the solder side
- UL94 flammability class V2
- No tools required for assembly
- Plug-in printed circuit board
- Plug-in cross-connection via ZQV 2.5 N
- Hinged, transparent cover
- BLZ 5.08 screw/plug and socket connector
- BLFZ 5.08 optional tension clamp/plug and socket connector
- Marking option with WS tags
- Mounts onto TS 35

Weidmüller individual parts for RS 70 locking socket

latch together to form units from 20 mm in width. Any desired intermediate parts or feet can be connected between two side pieces (locking feet) at intervals of 5 mm. In this way, a carrier module is constructed for PCB, on which various components can be soldered. The assembly snaps onto TS 32, TS 35 x 7.5 or TS 35 x 15 mounting rails.

The Weidmüller RSX custom circuit module

is a largely prefabricated unit wich accepts up to 5 components such as resistors, diodes, varistors or capacitors via soldering terminals. The components are connected via screw clamps or tab connections. This module is also suitable for mounting on TS 32, TS 35 x 7.5 or TS 35 x 15 mounting rails.

Weidmüller locking socket profiles

The RS 45, RS 80 and RS 100 profiles are available as 2 m long strips. The extruded profiles can be easily cut to any length with a saw. In this way, a carrier module is constructed for a printed circuit board on which various components can be soldered. Locking feet can be slid into these profiles for mounting on TS 32, TS 35 x 7.5 or TS 35 x 15 mounting rails. The sliding foot construction of the RS 80 also allows the fixing foot be turned through 180°.

Housings

Terminals

	DK 4	DKT 4
	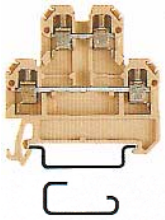	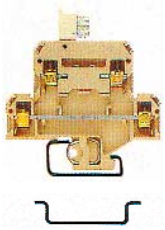
Dimensions		
Terminal width (+fitting tolerance 0.2)	6 mm	6 mm
Insulating stripping length	9 mm	9 mm
Connection data		
Screw connection, solid	0.5…4 mm²	0.5…4 mm²
Screw connection, stranded	0.5…4 mm²	0.5…4 mm²
Conductor cross-section	AWG 22…12	AWG 22…17
Tightening torque range	0.5-1.0 Nm	0.5 - 1.0 Nm
Torque phase with DMS 2 electric screwdriver	1	1
Rated data acc. to VDE		
Rated cross-section	4 mm²	4 mm²
Rated voltage	380 V~	380 V~
Rated current	10 A	10 A
Power loss	0.5 W	0.5 W
Connection diagram	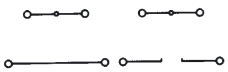	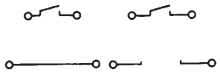

Ordering data

Terminal					
for TS 32 Y	Type	DK 4 PA	DK 4 PA	DKT 4 PA	DKT 4 PA
	Cat. No.	**1537960000**	**1115460000**	**1686940000**	**1115660000**
for TS 35 W	Type	DK 4/35 PA	DK 4/35 PA	DKT 4 /35PA	DKT 4/35 PA
	Cat. No.	**8203490000**	**1115560000**	**0687460000**	**1115760000**
Matching contour frame					
for TS 32 Y	Type	DK 4 RA	DK 4 RA		
	Cat. No.	**0690960000**	**0690960000**		
for TS 35 W	Type	DK 4 RA/35	DK 4 RA/35		
	Cat. No.	**0691060000**	**0691060000**		

Accessories

		Type	Cat. No.	Qty.	Type	Cat. No.	Qty.
Mounting rail (2 m lenghts)		TS 32	**0122800000**	2 m	TS 32	**0122800000**	2 m
		TS 35 x 7.5	**0383400000**	2 m	TS 35 x 7.5	**0383400000**	2 m
		TS 35 x 15	**0498000000**	2 m	TS 35 x 15	**0498000000**	2 m
End bracket	for TS 32	EWK 1 (8.5)	**0206160000**	50	EWK 1 (8.5)	**0206160000**	50
(thickness mm)	for TS 35	EW 35 (8.5)	**0383560000**	50	EW 35 (8.5)	**0383560000**	50
End plate (thickness mm)		AP PA (1.5)	**0359260000**	20	AP PA (1.5)	**0687560000**	20
Partition		TSch 4	**0363360000**	100	TSch 4	**0363360000**	100
Socket for test plug		StB 8.5	**0215700000**	50			
Test plug (pin diameter)		PS (ø 2.3)	**0180400000**	20			
Cross-connection	2-pole	Q 2	**0336400000**	50			
(preassembled)	3-pole	Q 3	**0336500000**	50			
	4-pole	Q 4	**0336600000**	50			
	10-pole	Q 10	**0368600000**	20			
Switchable cross-connection bracket		VL 2	**0446700000**	–			
Connection sleeve		VH 10	**0446600000**	100			
Fixing screw		BS M 2.5 x 14	**0266800000**	100			
Cover plate (4 terminals)		AD 4	**0303400000**	50			
Fixing screw (plastic)		BSK M 2.5 x 18	**0303300000**	100			
Cross connection bridge		QB 2*	**0482700000**	100	QB 2*	**0482700000**	100
		QB 3*	**0482800000**	50	QB 3*	**0482800000**	50
		QB 4*	**0482900000**	50	QB 4*	**0482900000**	50
		QB 75 blank*	**0526400000**	10	QB 75 blank*	**0526400000**	10
		Insulation profile	**0526700000**	–	Insulation profile	**0526700000**	–

* Accessories see terminals catalogue

Terminals

	WDK 2.5	WDK 2.5 F	WDK 2.5 FF
	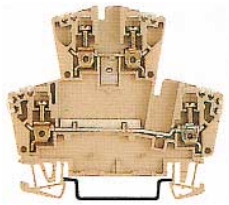		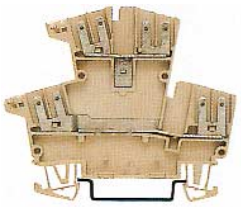
Dimensions			
Terminal width (+fitting tolerance 0.2)	5 mm 5 mm	5 mm	5 mm
Insulating stripping length	10 mm 10 mm	10 mm	–
Connection data			
Screw connection, solid	0.5…4 mm² 0.5…4 mm²	0.5…4 mm²	
Screw connection, stranded	0.5…2.5 mm² 0.5…2.5 mm²	0.5…2.5 mm²	
Conductor cross-section	AWG 26…4 AWG 26…4	AWG 26…4	
Tightening torque range	0.4 - 0.7 Nm	0.4 - 0.7 Nm	
Torque phase with DMS 2 electric screwdriver	1	1	
Rated data acc. to VDE			
Rated cross-section	2.5 mm²	2.5 mm²	1 mm²
Rated voltage	380 V~	380 V~	380 V~
Rated current	26 A	12 A (2 x 6 A)	12 A (2 x 6 A)
Power loss	0.5 W	0.5 W	0.5 W
Connection diagram	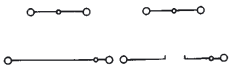		
Ordering data			
Terminal			
for TS 32 Y Type			
Cat. No.			
for TS 35 W Type	WDK 2.5 WDK 2.5	WDK 2.5 F	WDK 2.5 FF
Cat. No.	**1023200000** **1023100000**	**1021600000**	**1021700000**
Matching contour frame			
for TS 32 Y Type			
Cat. No.			
for TS 35 W Type	WZR WDK 2.5	WZR WDK 2.5	WZR WDK 2.5
Cat. No.	**1074000000**	**1074000000**	**1074000000**
Accessories	Type Cat. No. Qty.	Type Cat. No. Qty.	Type Cat. No. Qty.
Mounting rail (2 m lenghts)	TS 35 x 7.5 **0383400000** 2 m	TS 35 x 7.5 **0383400000** 2 m	TS 35 x 7.5 **0383400000** 2 m
	slotted **0514500000** 2 m	slotted **0514500000** 2 m	slotted **0514500000** 2 m
	TS 35 x 15 **0498000000** 2 m	TS 35 x 15 **0498000000** 2 m	TS 35 x 15 **0498000000** 2 m
End bracket (thickness mm) for TS 35	EW 35 (8.5) **0383560000** 50	EW 35 (8.5) **0383560000** 50	EW 35 (8.5) **0383560000** 50
End plate (thickness mm)	WAP **1059100000** 100	WAP **1059100000** 100	WAP **1059100000** 100
Cross-connection (preassembled) 2-pole	WQV 2.5 **1053660000** 50	WQV 2.5 **1053660000** 50	WQV 2.5 **1053660000** 50
3-pole	WQV 2.5 **1053760000** 50	WQV 2.5 **1053760000** 50	WQV 2.5 **1053760000** 50
4-pole	WQV 2.5 **1053860000** 50	WQV 2.5 **1053860000** 50	WQV 2.5 **1053860000** 50
10-pole	WQV 2.5 **1054460000** 50	WQV 2.5 **1054460000** 50	WQV 2.5 **1054460000** 50

Housings

Housings

EG 1

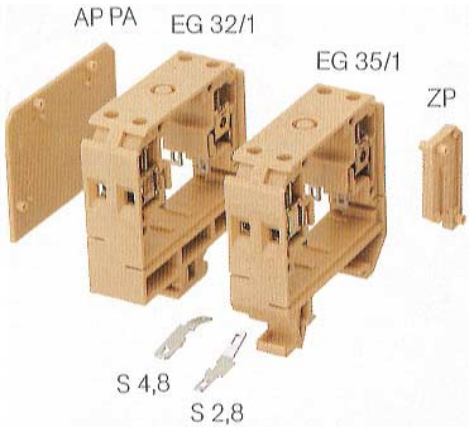

EG 2

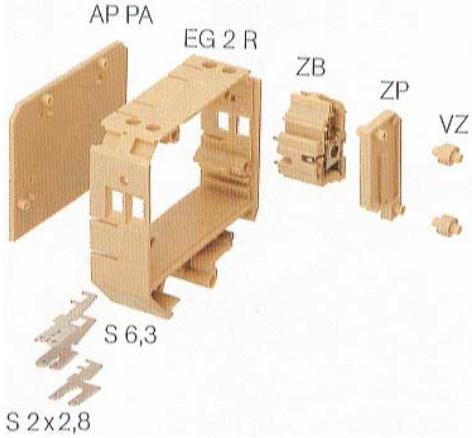

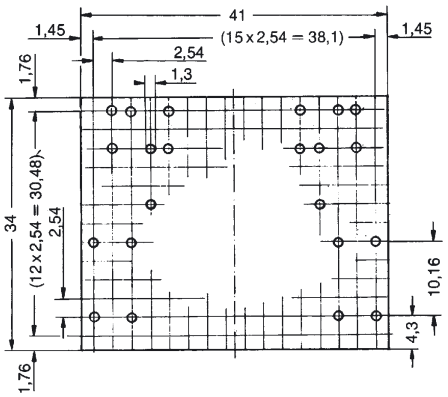

Rated data						
Reference voltage acc. to VDE 0110 1/89	300 V			300 V		
Pollution severity	2			2		
Overvoltage category	II			II		
Current	10 A			10 A		
Power loss (when mounted in row)	1 W			1 W		
Protection class	IP 20			IP 20		
Flammability acc. to UL level	V-2			V -2		
Upper temperature limit	100 °C			100 °C		
Connection data						
Screw connection solid	0.5...4 mm²			0.5...4 mm²		
Screw connection stranded	0.5...2.5 mm²			0.5...2.5 mm²		
Tightening torque range	0.5 - 1.0 Nm			0.5 - 1.0 Nm		
Torque phase with DMS 2 electric srewdriver	2			2		
Ordering data	Type	Cat. No.	Qty.	Type	Cat. No.	Qty.
Housing frame	EG 32/1 for TS 32	**0453560000**	20	EG 2 R	**0508860000**	20
	EG 35/1 for TS 35	**0453860000**	20			
End plate	AP PA	**0453660000**	20	AP PA	**0453660000**	20
Combi foot, latchable						
Assembly plate						
Clamping yoke unit, right				ZB-R	**0495960000**	20
Clamping yoke unit, left				ZB-L	**0495860000**	20
Intermediate plate	ZP	**0453760000**	20	ZP	**0453760000**	20
Connection spigot	VZ	**0510260000**	50	VZ	**0510260000**	50
Connection tab 0.8 x 6.3 mm						
Connection tab 2 x 0.8 x 2.8 mm						
Tab / solder lug 0.8 x 2.8 mm	S 2.8	**0475800000**	20	S 6.3	**0496100000**	100
Tab / solder lug 0.8 x 4.8 mm	S 4.8	**0475700000**	20	S 2 x 2.8	**0163500000**	50
Printed circuit board, copper-coated						
Printed circuit board 5.08 pitch						
Dimensions						
see page	306, Fig. I			306, Fig. II		

Housings

EG 3

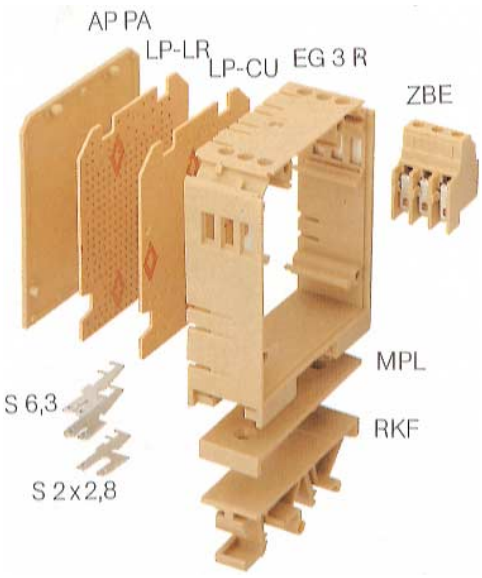

300 V	
2	
II	
10 A	
1.5 W	
IP 20	
V - 2	
100 °C	
0.5...4 mm²	
0.5...2.5 mm²	
0.4 - 0.8 Nm	
1	

Type	Cat. No.	Qty.
EG 3 R	**0163960000**	15
AP PA	**0133760000**	20
RKF	**0163860000**	20
MPL	**0158560000**	50
ZBE	**0138360000**	50
ZBE	**0138360000**	50
VZ	**0510260000**	50
S 6.3	**0496100000**	100
S 2 x 2.8	**0163500000**	50
LP-CU	**0167300000**	–
LP-LR	**0167400000**	–

307, Fig. V

EG 4

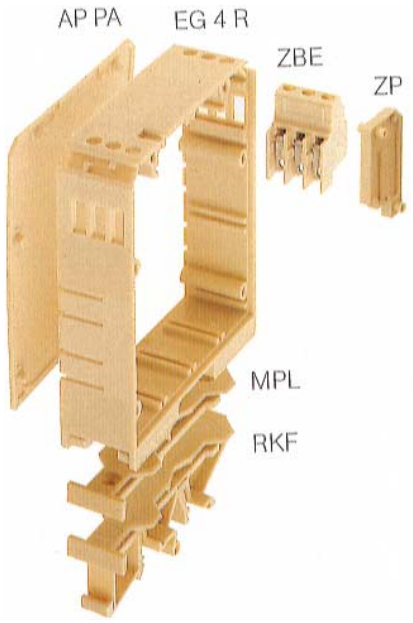

300 V	
2	
III	
10 A	
1.6 W	
IP 20	
V - 2	
100 °C	
0.5...4 mm²	
0.5...2.5 mm²	
0.4 - 0.8 Nm	
1	

Type	Cat. No.	Qty.
EG 4 R	**1116560000**	–
AP PA	**1116060000**	20
RKF	**1116260000**	20
MPL	**1116360000**	50
ZBE	**0138360000**	50
ZBE	**0138360000**	50
VZ	**0510260000**	50
ZP	**0453760000**	–

307, Fig. VI

EG 5

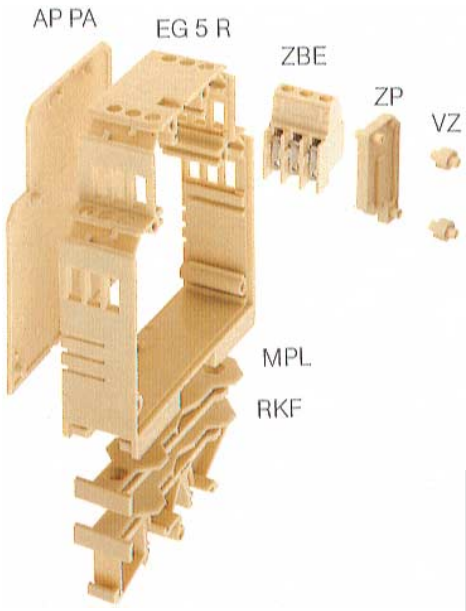

300 V	
2	
III	
1 A	
1.6 W	
IP 20	
V - 2	
100 °C	
0.5...4 mm²	
0.5...2.5 mm²	
0.5 - 0.8 Nm	
1	

Type	Cat. No.	Qty.
EG 5 R	**1116860000**	–
AP PA	**1116160000**	20
RKF	**1116260000**	20
MPL	**1116360000**	50
ZBE	**0138360000**	50
ZBE	**0138360000**	50
VZ	**0510260000**	50
ZP	**0453760000**	–

307, Fig. VII

Housings

Housings for pluggable printed circuit boards

Housing version	Polyamide PA 6.6
Flammability class	U2 (UL 94)
Colour grey	

Notes:

BLZ may only be actuated with the supply disconnected. If small power ratings need to be switched for operating reasons, empirical values are available on request.

WAVEBOX S 22.5



WAVEBOX L 22.5



Description	Type	Cat. No.	Qty.	Type	Cat. No.	Qty.
Housing base completely assembled with locking foot, not cross-connectable	WAVEBOX S 22.5	**8426440000**	10	WAVEBOX L 22.5	**8426470000**	10
Housing base completely assembled with locking foot, cross-connectable	WAVEBOX S 22.5 QV	**8426450000**	10	WAVEBOX L 22.5 QV	**8426480000**	10
Top part with transparent cover/top unit	Head	**8426460000**	10		**8426490000**	10
Pin header 5.08/3-pole orange; right	Pin header	**8426620000**	10		**8426620000**	10
Pin header 5.08/3-pole orange; left	Pin header	**8426630000**	10		**8426630000**	10
Connector socket 2-pole for BLZ 5.08/2 screw terminal						
- orange						
- black						
Other colours are available on request						
Connector socket 3-pole for BLZ 5.08/3 terminal						
- orange	Connector socket	**1526560000**	100		**1526560000**	100
- black	Connector socket	**1526510000**	100		**1526510000**	100
Other colours are available on request						
Connector socket 2-pole for BLZ 5.08/3 tension clamp terminal						
- orange						
- black						
Connector socket 3-pole for BLZ 5.08/3 tension clamp terminal						
- orange	Connector socket	**1707470000**	100		**1707470000**	100
- black	Connector socket	**1707700000**	100		**1707700000**	100
Accessories						
Cross-connection ZQV 2.5N/2 black	ZQV 2.5N/2 black	**1718080000**	60		**1718080000**	60
Cross-connection ZQV 2.5N/2 red	ZQV 2.5N/2 red	**1717900000**	60		**1717900000**	60
Cross-connection ZQV 2.5N/2 blue	ZQV 2.5N/2 blue	**1717990000**	60		**1717990000**	60
Cross-connection ZQV 2.5N/2 yellow	ZQV 2.5N/2 yellow	**1693800000**	60		**1693800000**	60
Coding elements for BLZ BLZ KO black	Coding element	**1545710000**	100		**1545710000**	100
Coding elements for BLZ BLZ KO orange	Coding element	**1573010000**	100		**1573010000**	100
WS connector marker						
WS15/5 Multicard*						
WS10/5 Multicard *					-	-
WS10/5 Neutral*		-	-		-	-
Screw cap		-	-	CAP	**8428120000**	-
Power loss, arranged side by side, type		2.2 W/40 °C		3 W/20 °C	2.2 W/40 °C	

Ordering example WAVEBOX S 22.5	Type	Cat. No.	
Housing base completely assembled with locking foot, not cross-connectable		**8426440000**	1x
Top part with transparent cover/top unit		**8426460000**	1x
Pin header 5,08/3-pole orange; right		**8426620000**	1x
Pin header 5.08/3-pole orange; left		**8426630000**	1x
Connector socket 3-pole for BLZ 5.08/3 screw terminal, orange		**1526560000**	2x

* Marker see page 317 + 318

Attention!
These WAVEBOX-housings are authorized only to be used in a closed control cubicle!

Dimension drawing, see page 308

Housings

Housings for pluggable printed circuit boards

Housing version	Polyamide PA 6.6
Flammability class	U2 (UL 94)
Colour	grey

Hinweise:

BLZ may only be actuated with the supply disconnected. If small power ratings need to be switched for operating reasons, empirical values are available on request.

WAVEBOX 12.5 mm



WAVEBOX 17.5 mm



Description	Type	Cat. No.	Qty.	Type	Cat. No.	Qty.
Housing base completely assembled with locking foot, not cross-connectable	WAVEBOX 12.5 mm	**8426530000**	12	WAVEBOX 17.5 mm	**8426560000**	8
Housing base completely assembled with locking foot, cross-connectable	WAVEBOX 12.5 mm	**8426540000**	12	WAVEBOX 17.5 mm	**8426570000**	8
Top part with transparent cover/top unit		**8426550000**	12		**8426580000**	8
Pin header 5.08/2/3-pole; right	orange	**8427390000**	100	beige	**8449220000**	100
Pin header 5.08/2/3-pole; left	orange	**8427400000**	100	beige	**8449230000**	100
Connector socket 2-pole for BLZ 5.08/2 screw terminal						
- orange		**1526460000**	100			
- black		**1526410000**	100			
Other colours are available on request						
Connector socket 3-pole for BLZ 5.08/3 screw terminal						
- orange					**1526560000**	100
- black					**1526510000**	
Other colours are available on request						
Connector socket 2-pole for BLZ 5.08/3 tension clamp terminal						
- orange		**1707460000**	100			
- black		**1707690000**	100			
Connector socket 3-pole for BLZ 5.08/3 tension clamp terminal						
- orange					**1707470000**	100
- black					**1707700000**	100
Accessories						
Cross-connection ZQV 2.5N/2 black		**1718080000**	60		**1718080000**	60
Cross-connection ZQV 2.5N/2 red		**1717900000**	60		**1717900000**	60
Cross-connection ZQV 2.5N/2 blue		**1717990000**	60		**1717990000**	60
Cross-connection ZQV 2.5N/2 yellow		**1693800000**	60		**1693800000**	60
Coding elements for BLZ BLZ KO black		**1678530000**	1		**1678530000**	1
Coding elements for BLZ BLZ KO orange						
WS connector marker						
WS15/5 Multicard*		**1609890000**	96		**1609890000**	96
WS10/5 Multicard *		**1635010000**	144		-	-
WS10/5 Neutral*		**1060860000**	200		-	-
Screw cap	CAP	**8428130000**	100	CAP	**8428120000**	100
Power loss, arranged side by side, type	3 W/20 °C	2 W/40 °C		3 W/20 °C	2 W/40 °C	

* Marker see page 317 + 318

Attention!
These WAVEBOX-housings are authorized only to be used in a closed control cubicle!

Dimension drawing, see page 308

Housings

Housings

	SEG-U/LPU	EG 6
	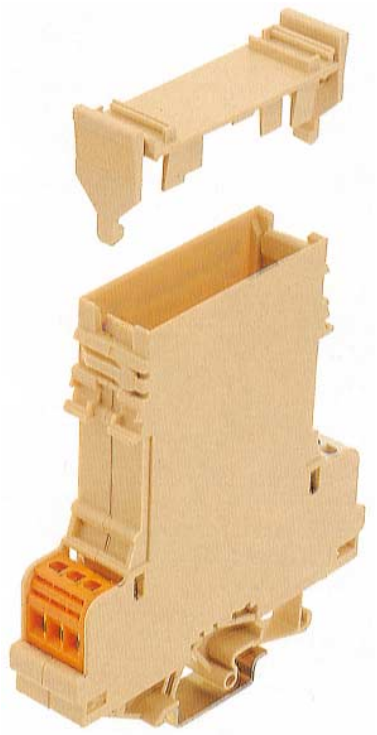	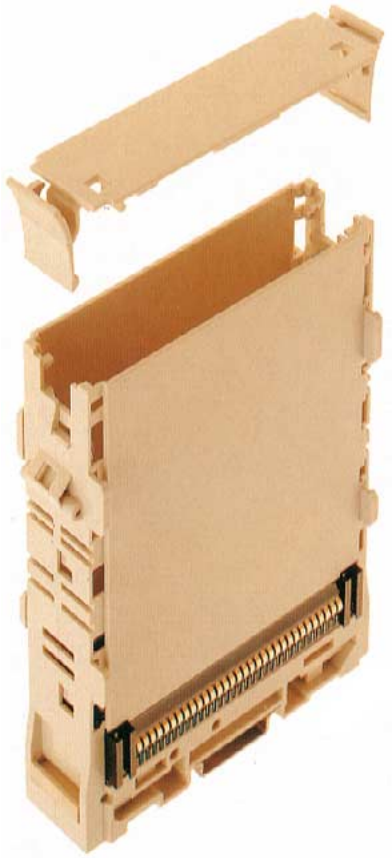
Rated data		
Reference voltage acc. to VDE 0110 1/89	50 V	32 V nach VDE 0110/1.89
Pollution severity	2	2
Overvoltage category	III	III
Current	1 A	
Current-carrying capacity of bus contacts		1 A/δ_U 50 °C
Volume resistance of bus contacts		12 mΩ
Printed circuit board dimensions		100 x 120 x 1.8 mm
Power loss (when mounted in row)	1.5 W	
Protection class	IP 20	IP 00
Flammability acc. to UL level	V -2	V - 2
Upper temperature limit	100 °C	100 °C
Connection data		
Screw connection solid	0.5...4 mm²	
Screw connection stranded	0.5...2.5 mm²	
Tightening torque range	0.5 Nm	
Torque phase with electric screwdriver DMS 2	1	

Ordering data	Type	Cat. No.	Qty.	Type	Cat. No.
Housing frame	Housing SEG/U	**8007870000**	–	EG 6 (incl. front plate)	**8095840000**
	Cover plate	**8066100000**	–		
End plate					
Combi foot, latchable					
Assembly plate					
Clamping yoke unit, right					
Clamping yoke unit, left					
Intermediate plate					
Connection spigot					
Connection tab 0.8 x 6.3 mm					
Connection tab 2 x 0.8 x 2.8 mm					
Tab / solder lug 0.8 x 2.8 mm					
Tab / solder lug 0.8 x 4.8 mm					
Printed circuit board, copper-coated					
Printed circuit board 2.54 pitch					

Dimensions		
See page	307	307

Locking socket

RSX

Custom-circuit module

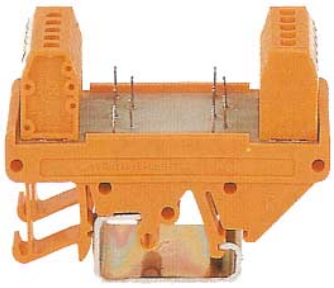

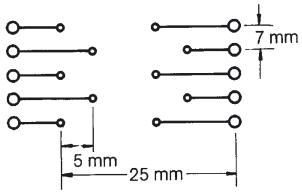

SKH-RS

Card-holder for rail-mounted profiles

Individual parts RS 70

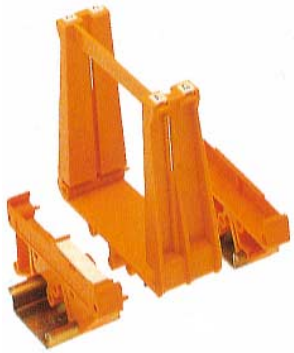

Dimensions				
Fixing foot			Total width:	77 mm
Spacer			Length:	25 mm
Printed circuit board			Inside height:	66 mm
			Inside width:	55 mm
	For soldering 5 components		Can be engaged together with RS 70 individual parts	
	Height of solder lugs: 6 mm		For vertical insertion of a printed circuit board	
	Solder lug spacing: approx. 20 mm		Width:	60 mm
	Max. voltage: 250 V~		Thickness:	1.8 (+0.15) mm (DIN 40802 T. 2)
	Max. current: 5 A			
Ordering data	Type	Cat. No.	Type	Cat. No. Qty.
Screw connection version	RSX	**0329761001**		
Tab connection version	RSX-F	**0329860000**		
Card holder				
Strip profile			SKH-RS	**4163020000** 1
Fixing foot right, with marking facility			RFB	**0119560000** 20
Fixing foot right, without marking facility			RFO	**0126260000** 20
Fixing foot left, without marking facility			RF	**0119660000** 20
Fixing foot middle (intermediate foot)			RFM	**0213760000** 20
Fixing foot (RS 80/RS 100) for TS 32/TS 35				
Spacer 5 mm			ZW 5	**0119760000** 20
Spacer 15 mm			ZW 15	**0119860000** 20
Spacer 25 mm			ZW 25	**0126160000** 20
Spacer 30 mm			ZW 30	**0119960000** 20
Spacer 45 mm			ZW 45	**0120060000** 20
End plate for mounting on rail without cover				
End plate for direct mounting without cover				
End plate for mounting on rail with low cover				
End plate for direct mounting with low cover				
End plate for mounting on rail with high cover				
End plate for direct mounting with high cover				
Cover profile, low				
Cover profile, high				
Screws				
Accessories				
Insert tag (unprinted)			ESO 7	**0515200000** –
Protective strip, transparent			SSt 7	**0515300000** 20

Housings

Locking socket

RS 45

Strip profile

RS 70

Locking socket
Individual parts



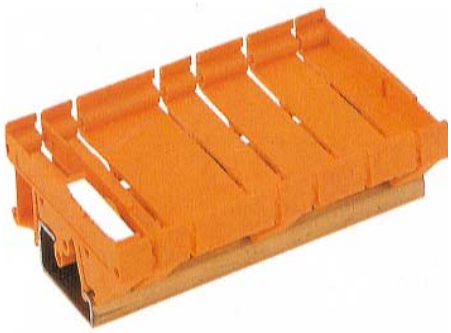

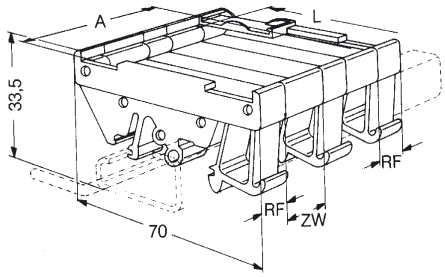

Dimensions)				
Fixing foot	Total width:	45 mm	Width: 10 mm	Maß RF
Spacer	Length:	1000 mm/2000 mm	Width: 5 mm/15 mm/25 mm/30 mm/45 mm	Dim. ZW
Printed circuit board	For horizontal insertion of a printed circuit board		Width: RS-Br.–2 mm (Ex.: RS=45 mm, LP=43 mm)	Dim. A
	Width:	42 (+0.5) mm	Length: 67.8 (–0.2) mm	Dim. L
	Thickness:	1.8 (+0.15) mm (DIN 40802 T. 2)	Thickness: 1.6 (±0.2) mm (DIN 40802 Part 2)	
	Length:	optional/60…2000 mm		
	Dim. of RS section: printed circuit board length – 4.5 mm			
	Dim. of ADP section: printed circuit board length – 1 mm			
	Example: circuit board length 160 mm, RS = 155.5 mm, ADP = 159 mm			
Rated data				
Flammability acc. to UL level	V-0 / V-2 strip profile / accessories		V-2	
Upper temperature limit	70 °C		100 °C	

Ordering data	Type		Cat. No.		Qty.	Type	Cat. No.	Qty.
String profile	RS 45 (up to 2000 mm)		**4027750000**		1			
	RS 45 (up to 1000 mm)		**8140880000**		1			
Fixing foot right, with marking facility						RFB	**0119560000**	
Fixing foot right, without marking facility						RFO	**0126260000**	20
Fixing foot left, without marking facility						RF	**0119660000**	20
Fixing foot middle (intermediate foot)						RFM	**0213760000**	20
Fixing foot (RS 80/RS 100) for TS 32/TS 35								
Spacer 5 mm						ZW 5	**0119760000**	20
Spacer 15 mm						ZW 15	**0119860000**	20
Spacer 25 mm						ZW 25	**0126160000**	20
Spacer 30 mm						ZW 30	**0119960000**	20
Spacer 45 mm						ZW 45	**0120060000**	20
End plate for mounting on rail without cover	AP 45/LI	AP 45/RE	**8143910000**	**8143900000**	20			
End plate for direct mounting without cover	AP 45/LI Di	AP 45/RE Di	**8140870000**	**8140860000**	20			
End plate for mounting on rail with low cover								
End plate for direct mounting with low cover								
End plate for mounting on rail with high cover								
End plate for direct mounting with high cover								
Cover profile, low								
Cover profile, high								
Screws	30 x 14		**4011200000**		–			

Accessories				
Insert tag (unprinted)			ESO 7	**0515200000**	–
Protective strip, transparent			SSt 7	**0515300000**	100

Housings

RS 80

Strip profile

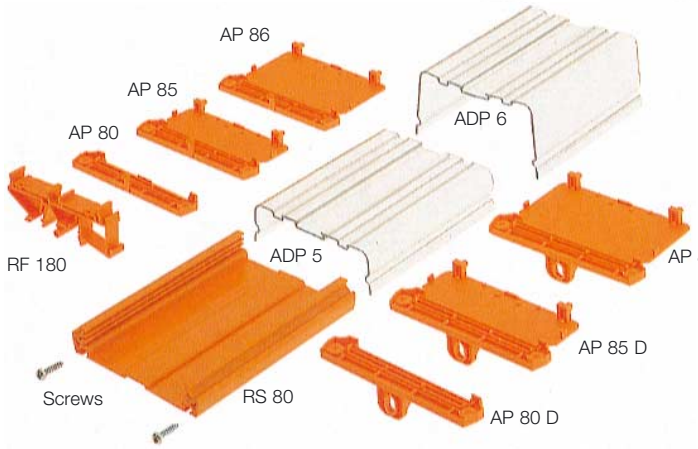

RS 100

Strip profile for Euro-cards

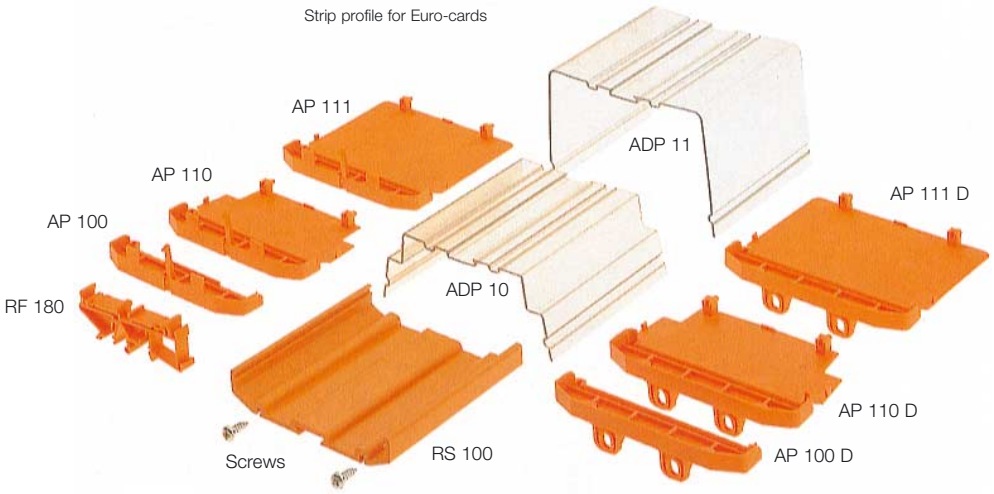



Total width:	84 mm
Length:	2000 mm
For horizontal insertion of a printed circuit board	
Width:	67.8 (+0.2) mm
Thickness:	1.8 (+0.15) mm (DIN 40802 T. 2)
Dim. RS section printed circuit board length –4.5 mm	
Dim. ADP section printed circuit board length –2 mm	
Example: circuit board length 160 mm, RS = 155.5 mm, ADP = 158 mm	
V-0 / V-2 strip profile / accessories	
70 °C	

Type	**orange** (RAL 2000)	**grey** (RAL 7032)	Qty.
RS 80 (2000 mm) grey		**4183130000**	1
RS 80 (2000 mm) orange	**4157440000**		1
RF 180	**1324460000**	**1773400000**	20
AP 80	**1324260000**	**8320300000**	20
AP 80 D	**1324360000**		20
AP RF 80 RE		**8156200000**	-
AP RF 80 LT		**8156210000**	-
AP 85	**1410860000**		20
AP 85 D	**1411060000**		20
AP 86	**1410960000**		20
AP 86 D	**1411160000**		20
ADP 5 (1000 mm)	**4167150000**		–
ADP 6 (1000 mm)	**4167160000**		–
30 x 14	**4011200000**		–

Total width:	104 mm
Length:	2000 mm/160 mm
For horizontal insertion of a printed circuit board	
Width:	100 (+0.5) mm
Thickness:	1.8 (+0.5) mm (DIN 40802 Part 2)
Dim. RS section printed circuit board length –4.5 mm	
Dim. ADP section printed circuit board length –1 mm	
Example: circuit board length 160 mm, RS = 155.5 mm, ADP = 159 mm	
V-0 / V-2 strip profile / accessories	
70 °C	

Type	**orange** (RAL 2000)	**grey** (RAL 7032)	Qty.
RS 100 (2000 mm) grey		**4010870000**	1
RS 100 (2000 mm) orange	**4144870000**		1
RS 100 (155 mm)	**4148400000**		1
RF 180	**1324460000**	**1773400000**	20
AP 100	**1185060000**	**1773410000**	20
AP 100 D	**1185160000**		20
AP 110	**1185260000**		20
AP 110 D	**1185360000**		20
AP 111	**1185460000**		20
AP 111 D	**1185560000**		20
ADP 10 (2000 mm)	**4169320000**		(2 m)
ADP 11 (2000 mm)	**4169330000**		(2 m)
40 x 14	**4019420000**		–

Housings

Housings EG…/RST OST

Dimensions
Connection data
Accessories

EGR / EG 7

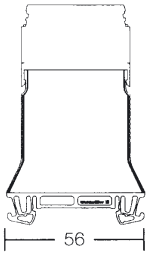

EGR / EGO



RST / EG 7

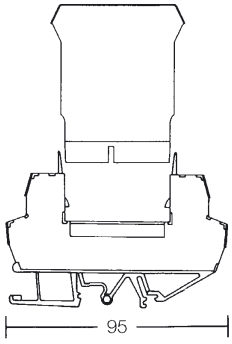

EG 8 / EG 12

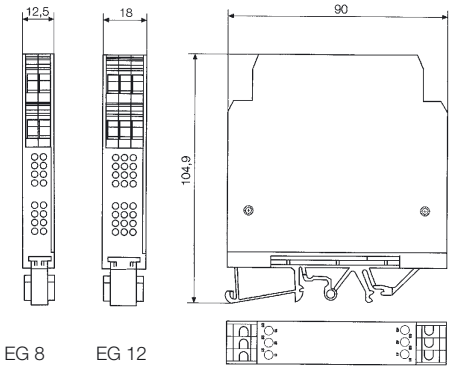

	EG 7/35 for TS 35	EG 7/combi foot
Width (mm)	10	10
Height (mm)		
with TS 35 x 7.5	92	96
with TS 35 x 15	100	103
with TS 32		100

RST/OST EG 7	
Width (mm)	10
Height assembled (mm)	
823472 for TS 32	
with TS 35 x 7.5	91
with TS 35 x 15	99
819383 with combi foot	
with TS 35 x 7.5	93
with TS 35 x 15	101
with TS 32	97

Dimensions	
EG 8	
Width (mm)	12.5
Height (mm)	104.9
EG 12	
Width (mm)	18
Height (mm)	104.9

Housings

Dimensions
Connection data
Accessories

DK 5

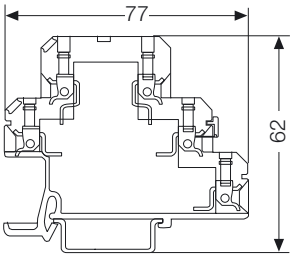

DK 6

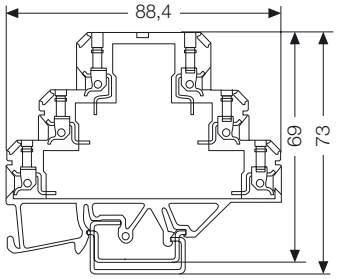

Dimensions		DK 5	DK 6
Terminal width (+ fitting tolerance 0.2 mm)		6 mm	8 mm
Insulating stripping length		9 mm	9 mm
Connection data			
Screw connection, solid		0.5...4 mm²	0.5...4 mm²
Screw connection, stranded		0.5...4 mm²	0.5...4 mm²
Connection cross-section		AWG 20...12	AWG 20...12

Accessories		Type	Cat. No.	Type	Cat. No.
Mounting rail (2 m lenghts)	Y	TS 32	**0122800000**	TS 32	
	W	TS 35 x 7.5	**0383400000**	TS 35 x 7.5	**0383400000**
	V	TS 35 x 15	**0498000000**	TS 35 x 15	**0498000000**
End bracket	for TS 32	EWK 2	**0199360000**	EWK 2	**0199360000**
	for TS 35	EW 35	**0383560000**	EW 35	**0383560000**
End plate		AP	**8268870000**	AP	**8324560000**
Marking material*		dekafix 5		dekafix 5	

*For more inormation see sectional catalogue 5/installation products

Housings miniconditioner MCZ

Dimensions
Connection data
Accessories

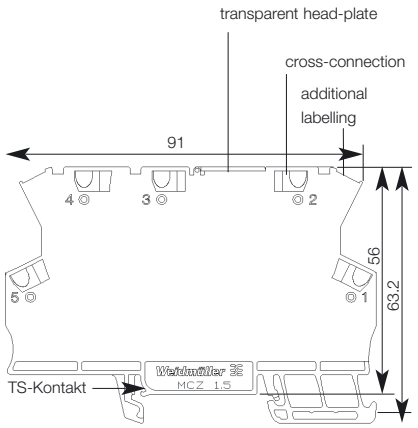

Dimensions		
Width (mm) + fitting tolerance 0.2		6
Insulating stripping length (mm)		6
Connection data		
Z-spring connection, solid		0.5…1.5 mm2
Z-spring connections, stranded		0.5…1.5 mm2
Connection cross-section		AWG 26…16
Accessories		Type / Cat. No.
Mounting rail (2 m lenghts)	W	TS 35 x 7.5 **0383400000**
Mounting rail (2 m lenghts)	U	TS 35 x 15 **0498000000**
End plate		APMCZ 1.5 **8389030000**
End bracket for TS 35		EW 35 **0383560000**
		EW 35 **0383560000**
Cross-connection (pluggable)		ZQV 4 2-pole **1608950000**
		ZQV 4 3-pole **1608960000**
		ZQV 4 4-pole **1608970000**
		ZQV 4 5-pole **1608980000**
		ZQV 4 6-pole **1608990000**
		ZQV 4 7-pole **1609000000**
		ZQV 4 8-pole **1609010000**
		ZQV 4 9-pole **1609020000**
		ZQV 4 10-pole **1609030000**

Housings
EG…/EG-U/LPU

Dimensions
Connection data
Accessories

EG 1 - Fig. I

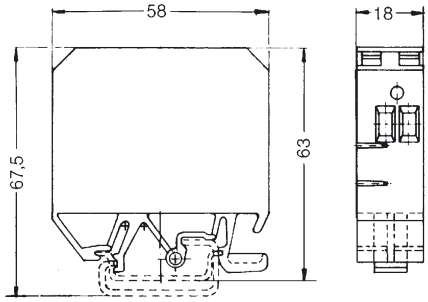

EG 2 - Fig. II

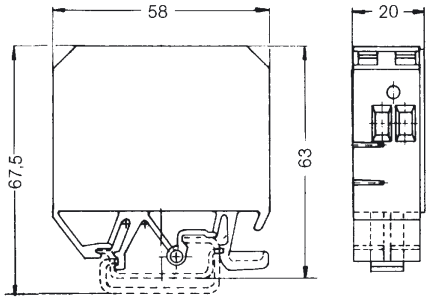

Dimensions			
Terminal width (+fitting tolerance 0.2 mm)		18 mm	20 mm
Insulating stripping length		12 mm	12 mm
Connection data			
Screw connection, solid		0.5…6 mm²	0.5…6 mm²
Screw connection, stranded		0.5…4 mm²	0.5…4 mm²
Connection cross-section		AWG 20…12	AWG 20…12
Accessories		Type / Cat. No.	Type / Cat. No.
Mounting rail (2 m lenghts)	Y	TS 32 **0122800000**	TS 32 **0122800000**
	W	TS 35 x 7.5 **0383400000**	TS 35 x 7.5 **0383400000**
	U	TS 35 x 15 **0498000000**	TS 35 x 15 **0498000000**
End bracket	for TS 32	EKW 2 **0199360000**	EKW 2 **0199360000**
	for TS 35	EW 35 **0383560000**	EW 35 **0383560000**
Cross connection wire: 80 mm long, 50-pole/1 mm²		QD 50/grey **0238700000**	QD 50/grey **0238700000**
Marking material*		**dekafix 5**	**dekafix 5**

EG 2 – Fig. III

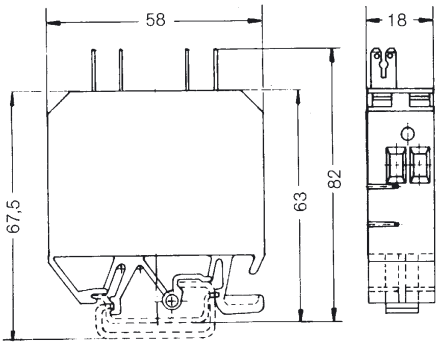

EG 2 – Fig. IV

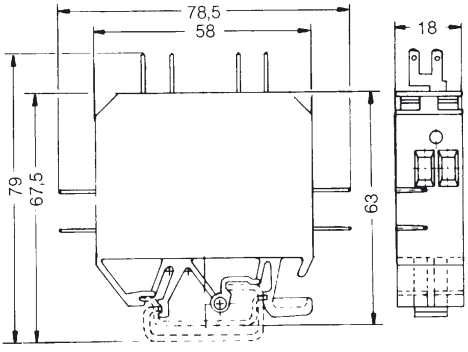

Dimensions			
Terminal width (+fitting tolerance 0.2 mm)		18 mm	18 mm
Insulating stripping length			
Connection data			
Screw connection, solid			
Screw connection, stranded			
Tab connection (DIN 46247)		2x 0.8 x 2.8 mm or 1x 0.8 x 6.3 mm	2x 0.8 x 2.8 mm
Connection cross-section			
Accessories		Type / Cat. No.	Type / Cat. No.
Mounting rail (2 m lenghts)	Y	TS 32 **0122800000**	TS 32 **0122800000**
	W	TS 35 x 7.5 **0383400000**	TS 35 x 7.5 **0383400000**
	U	TS 35 x 15 **0498000000**	TS 35 x 15 **0498000000**
End bracket	for TS 32	EKW 2 **0199360000**	EKW 2 **0199360000**
	for TS 35	EW 35 **0383560000**	EW 35 **0383560000**
Cross connection wire: 80 mm long, 50-pole/1 mm²		QD 50/grey **0238700000**	QD 50/grey **0238700000**
Marking material*		**dekafix 5**	**dekafix 5**

* see sectional catalogue 7

EG 3 - Fig. V

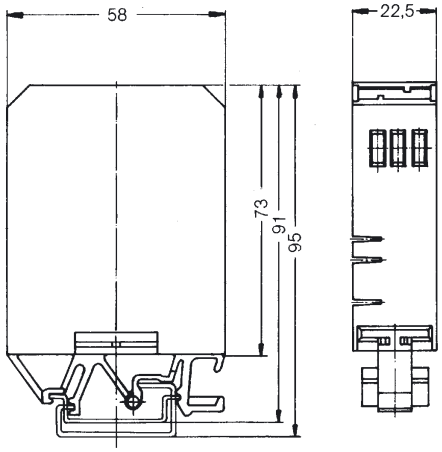

with assembly plate MPL

22.5 mm	
17 mm	
0.5…4 mm²	
0.5…2.5 mm²	

Type	Cat. No.
TS 32	**0122800000**
TS 35 x 7.5	**0383400000**
TS 35 x 15	**0498000000**
EKW 2	**0199360000**
EW 35	**0383560000**
QD 50/grey	**0238700000**
dekafix 6.5	

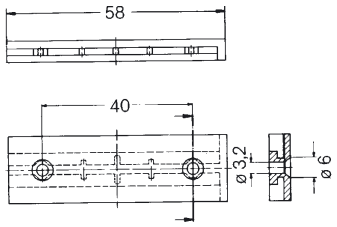

with assembly plate MPL

dekafix 6.5

SEG-U/LPU

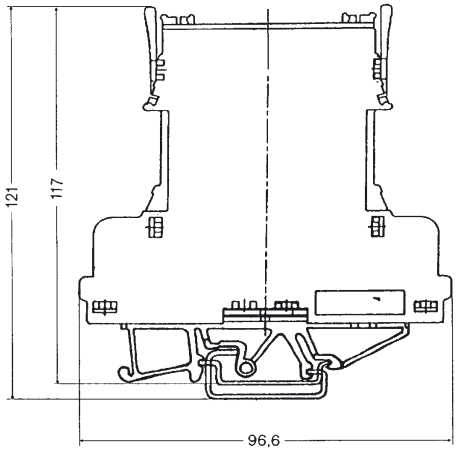

20 mm	
17 mm	
0.5…4 mm²	
0.5…2.5 mm²	
AWG 26…14	

Type	Cat. No.
TS 32	**0122800000**
TS 35 x 7.5	**0383400000**
TS 35 x 15	**0498000000**
EKW 2	**0199360000**
EW 35	**0383560000**
QD 50/grey	**0238700000**
dekafix 5	

EG 4 – Fig. VI

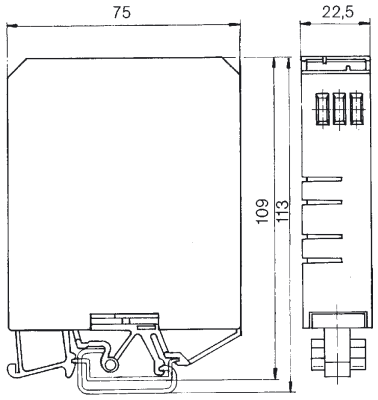

22.5 mm	
17 mm	
0.5…4 mm²	
0.5…2.5 mm²	
AWG 22…12	

Type	Cat. No.
TS 32	**0122800000**
TS 35 x 7.5	**0383400000**
TS 35 x 15	**0498000000**
EKW 2	**0199360000**
EW 35	**0383560000**
QD 50/grey	**0238700000**
dekafix 6.5	

EG 5 – Fig. VII

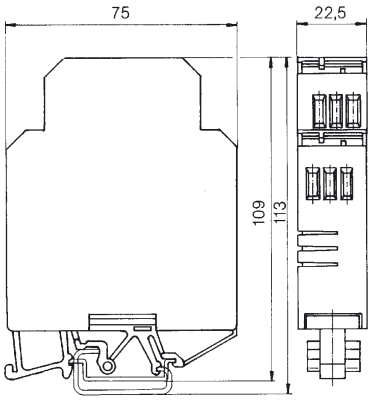

22.5 mm	
17 mm	
0.5…4 mm²	
0.5…2.5 mm²	
AWG 22…12	

Type	Cat. No.
TS 32	**0122800000**
TS 35 x 7.5	**0383400000**
TS 35 x 15	**0498000000**
EKW 2	**0199360000**
EW 35	**0383560000**
QD 50/grey	**0238700000**
dekafix 6.5	

EG 6

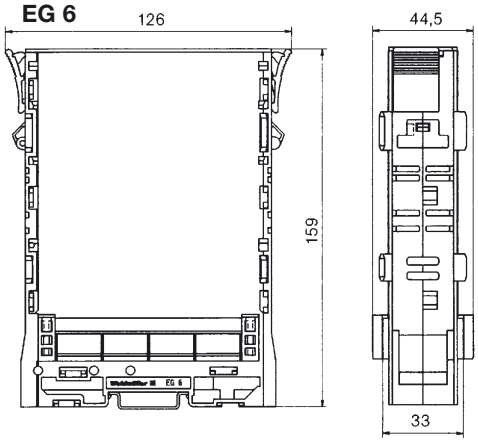

	Anreihmaß

Type	Cat. No.
TS 35 x 7.5	**0383400000**
TS 35 x 15	**0498000000**
EW 35	**0383560000**
dekafix 6.5	

WAVEBOX S 22.5

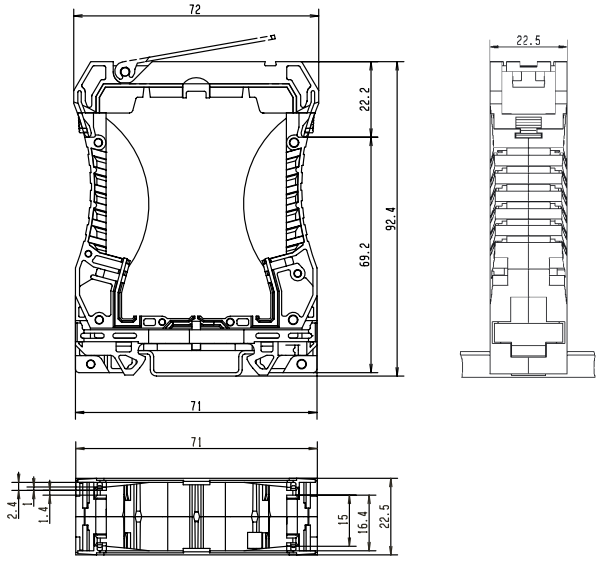

WAVEBOX L 22.5

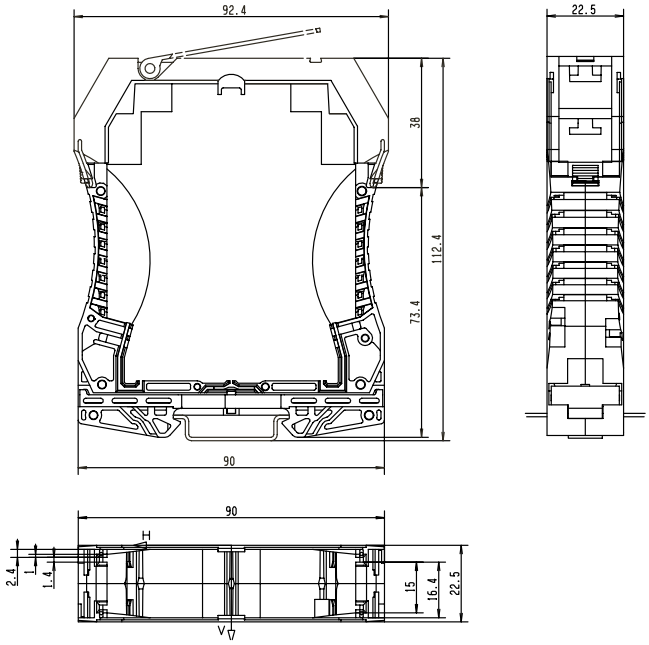

Printed circuit board S 22.5

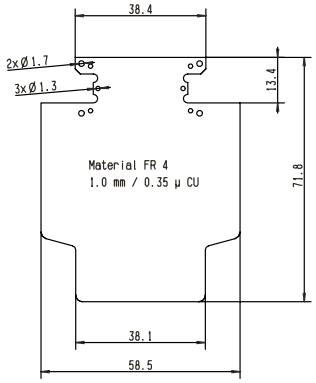

Printed circuit board L 22.5

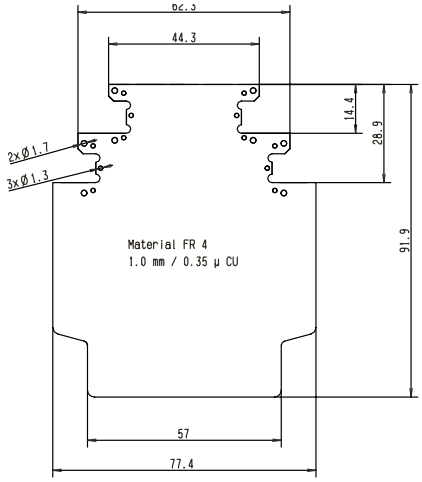

WAVEBOX 12.5

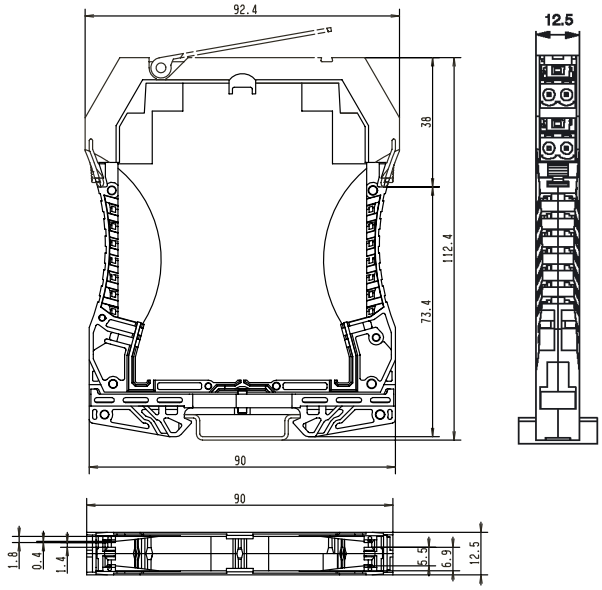

WAVEBOX 17.5

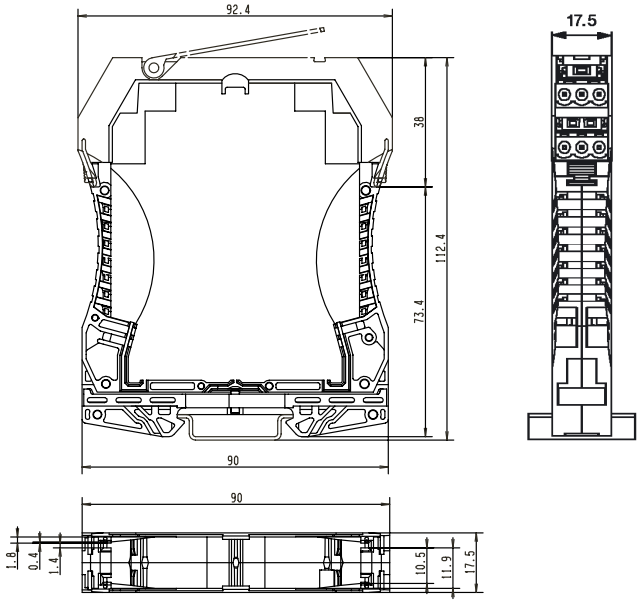

Socket blocks BLZ 5.08 / BLZF 5.08

Materials data	BLZ 5.08/SL 5.08	BLZF 5.08
Insulating material	PBT	PBT
Colour	orange	orange
Temperature range	-20.. +100 °C	-20.. +100 °C
Flammability class	UL 94 (VO)	UL 94 (VO)
Contact base material	CuSn	CuSn
Contact surface	tin plated	tin plated
Characteristic system values		
Pitch	5.08 mm	5.08 mm
Clearance	≥ 2.5 mm	≥ 3 mm
Creepage distance	≥ 4.0 mm	≥ 4.0 mm
Connection technology	Screw/solder connection	Tension clamp connection
Length of soldering pin	3.2/4.5 mm	
Mounting hole	ø 1.3 + 0.1 mm	
Insulating stripping length	7 mm	7 mm
Terminal screw	M 2.5	
Isolations resistance	≥ 10 MΩ	≥ 10^5 MΩ
Trough resistance	≤ 5 mΩ	≤ 5 mΩ
Connectable wires		
Terminal range	0.08...2.5 mm²	1.5 mm²
"e" solid H05(07)V-U	0.5...2.5 mm²	0.13...1.5 mm²
"f" flexible H05(07)V-K	0.5...2.5 mm²	0.13...2.5 mm²
"f" with ferrules		
according to DIN 46228/1	0.5...2.5 mm²	0.05...2.5 mm²
with plastic collar		
according to DIN 46228/4	0.5...1.5 mm²	1.5 mm²
AWG wire	28...14	26...14
Plug gauge acc. to EN 60947-1/10.91 Size	A3	
Rated data according to VDE		**VDE 0110 2.79**
Rated cross-section	2.5mm²	2.5mm²
Rated current	12A[1)]	12A[1)]
Current capacity	see derating curves[2)]	see derating curves[2)]
Test voltage	2.0 kV~	2.0 kV~
Nominal torque	0.5 Nm	
Rated data according to		**VDE 0110 1.89**
Rated cross-section		1.5mm²
Rated current (Tu=20°C)		12A[3)]
Rated voltage		250 V
Rated impulse voltage		4 kV
Pollution severity		3
Rated data according to UL	**Rated data according to UL**	
AWG wire	22...12	26...14
Rated current	10 A	10 A
Rated voltage, industriell	300 V~	300 V~
Operation tool		
Screwdriver type SD/SDI 5		
Approvals		
	List on request	Applied for

[1)] Rated cross-section and max. number of poles established from derating curve at 20 °C ambient temperature
[2)] Further derating curves on demand

Derating curve

Pin header with BLZ(F) / H07V-K1 5 / 3 POE

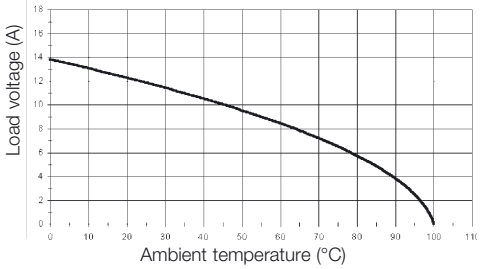

Derating curve

Pin header with BLZ(F) / H05V-K0 75 / 3 POE

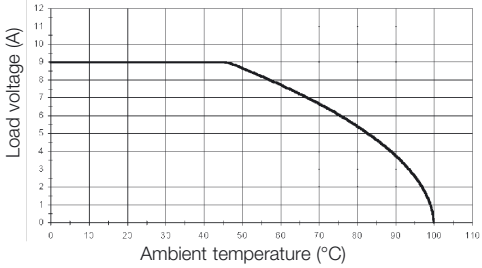

Derating curve

Pin header with BLZ(F) / H07V-K1 5 / 3 POE

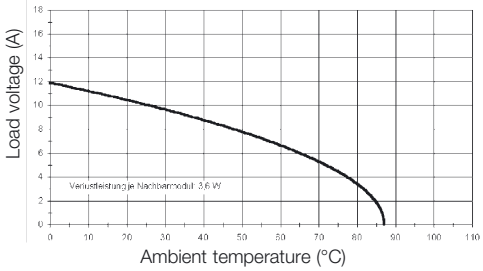

Housings

Locking socket profiles RS

	RS 80	RS 100
Rail mounting without cover	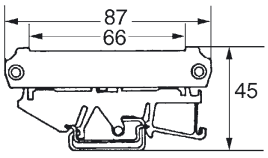	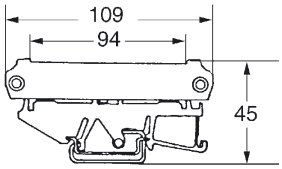
Direct mounting without cover		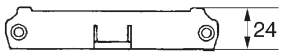
Rail mounting with low cover	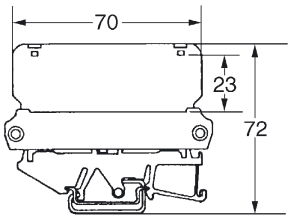	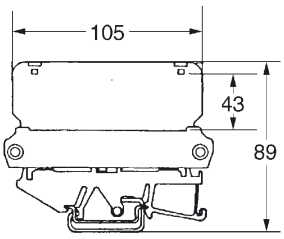
Direct mounting with low cover	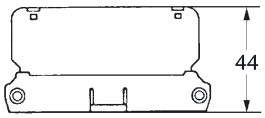	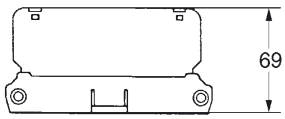
Rail mounting with high cover	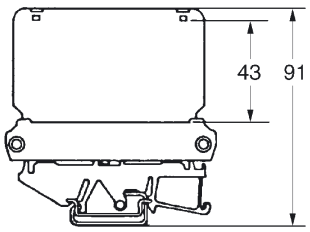	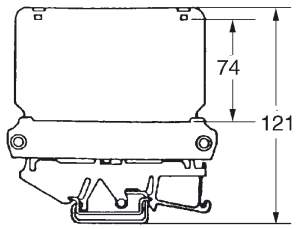
Direct mounting with high cover	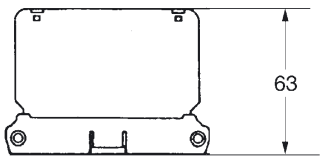	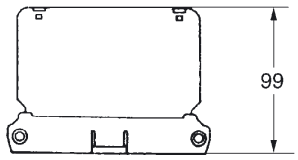
Fixing holes	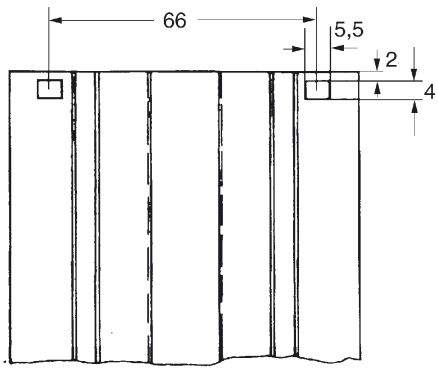 **ADP 5 / ADP 6**	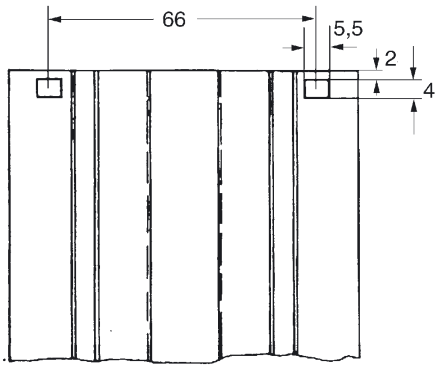 **ADP 10 / ADP 11**

Housings

Pluggable relay socket RSS 5MM

- Suitable for PCB mounting
- For miniature all-or-nothing relays type *Tyco* SNR, *NAIS* APE …
- Mechanical interlock with eject lever



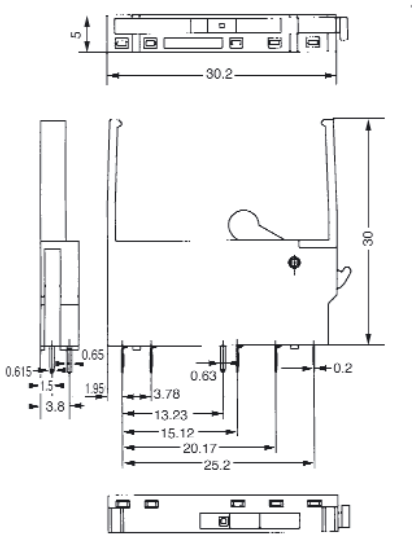

Ordering data	Type	Cat. No.
	RSS 5 MM	**4056360000**

Technical data	
Input voltage	250 V
Output voltage	250 V
Max. switching current	6 A
Rated current	5 A
Flammability class acc. to UL 94	V-2

Insulation coordination acc. to EN 50178	
Rated voltage	250 V
Rated impulse voltage	
Input circuit	4 kV (1.2/50 µs)
Output circuit	4 kV (1.2/50 µs)
Input < output	< 8 kV (1.2/50 µs)
Overvoltage category	III
Pollution severity	2

Ambient conditions	
Ambient temperature	- 25°C … + 50°C
Storage temperature	- 40°C … + 85°C

Dimensions	
Length / width / height	30.2 / 5 / 30 mm
Soldering pin	3.5 mm

Semi-wire relay socket OS 2 and OS 2/5

- Suitable for PCB mounting
- For solid state relais Type *Opto 22, Crouzet …*
- Secured in socket by fixing screws integrated in the module

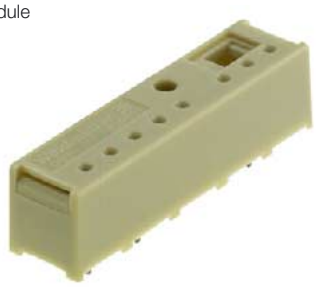

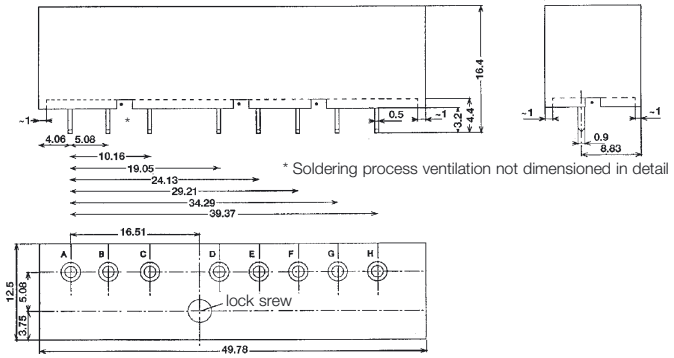

Ordering data	Type	Cat. No.
	OS2	**9455210000**[1]
	OS2/5	**9457640000**[2]

Technical data	
Input voltage	250 V
Output voltage	250 V
Rated current	5 A
Flammability class acc. to UL 94	V-2

Insulation coordination acc. to EN 50178	
Rated voltage	250 V
Rated impulse voltage	
Input circuit	4 kV (1.2/50 µs)
Output circuit	4 kV (1.2/50 µs)
Input < output	< 8 kV (1.2/50 µs)
Overvoltage category	III
Pollution severity	2

Ambient conditions	
Ambient temperature	- 25°C … + 50°C
Storage temperature	- 40°C … + 85°C

Dimensions	
Length / width / height	49,78 / 12.5 /13.2 mm
Soldering pin	3.2 mm

[1] equipped with with contact sockets B, C, F, H
[2] equipped with with contact sockets A, B, C, F, H