80i-110s

AC/DC CURRENT PROBE

Users Manual

November 1996
© 1994, 1996 Fluke Corporation.
All rights reserved. All product names are trademarks of their respective companies.
Printed in the Netherlands

FLUKE®

Table of Contents

INTRODUCING THE CURRENT PROBE 3
UNPACKING 4
INSTALLING THE BATTERY 5
USING THE CURRENT PROBE SAFELY 6
ELECTRICAL SPECIFICATIONS 7
GENERAL SPECIFICATIONS 9
SAFETY SPECIFICATIONS 10
BATTERY INFORMATION 10
INSTRUMENT COMPATIBILITY 11
USING THE CURRENT PROBE 12
MEASUREMENT CONSIDERATIONS 14
MAINTENANCE 15
CLEANING AND STORAGE 15
PERFORMANCE VERIFICATION 16
REPLACEMENT PARTS 20

INTRODUCING THE CURRENT PROBE

The Fluke 80i-110s is a clamp-on AC/DC Current Probe that reproduces current waveforms found in modern commercial and industrial power distribution systems. The probe's performance is optimized for accurate reproduction of currents at line frequency and up to the 50th harmonic waveform. The 80i-110s is also compatible with any instrument capable of millivolt measurements. The Current Probe (shown in Figure 1) provides the following benefits:

- Accurate AC, DC and AC+DC current measurements for Electrical, Electronic and Automotive applications.
- Shielded for high noise immunity around electronic motor drives and ignition systems.
- Wide measurement range from 50 milliamps to 100 amps, useful to 10 milliamps.
- Jaw shaped for easy access to cramped spaces.
- Safety-designed 600 volt insulated BNC - compatible with Fluke ScopeMeter® test tools, Power Harmonic analyzers, and oscilloscopes.
- Selectable output of 10 millivolts per 1 amp for the 100 A range, and 100 millivolts per 1 amp for the 10 A range.

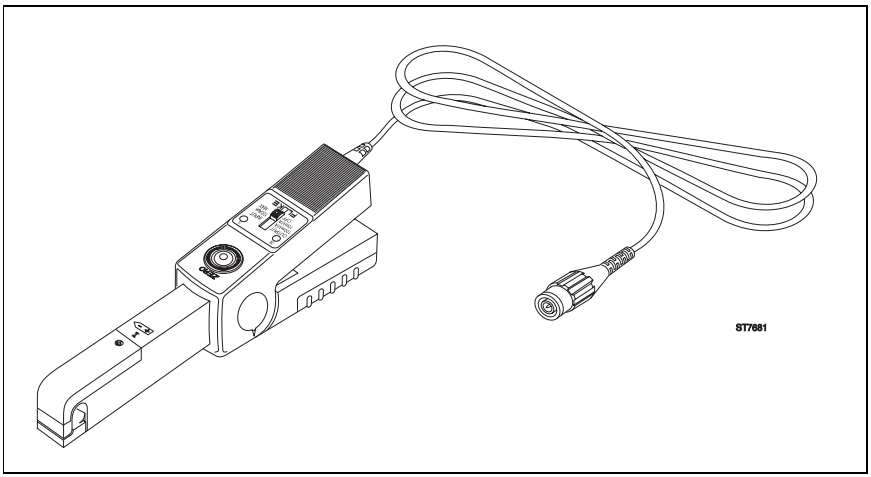

Figure 1. 80i-110s AC/DC Current Probe

UNPACKING

The following items should be included in your Current Probe box:

- AC/DC Current Probe, 80i-110s
- Users Manual (this book)
- Quick Reference Card
- 9 volt Battery, type IEC 6LR61

Check the contents of the shipping box for completeness. If something in the box has been damaged or missing, contact your distributor or the nearest FLUKE sales or service office immediately.

INSTALLING THE BATTERY

WARNING

TO AVOID ELECTRICAL SHOCK, UNCLAMP THE CURRENT PROBE FROM ANY CONDUCTOR, AND DISCONNECT THE SCOPEMETER TEST TOOL OR ANY OTHER MEASUREMENT DEVICE BEFORE INSTALLING OR REPLACING THE BATTERY.

At first use, remember to install the battery. Referring to Figure 2, use the following procedure to install the battery:

1. Be sure that you have unclamped the Current Probe from any conductor and have disconnected the ScopeMeter test tool or any other measurement device.
2. Be sure that the Current Probe is in the OFF position.
3. Locate the battery cover on the handle. (see Figure 2.) Loosen the screw with a flat-blade screwdriver.
4. Slide the battery cover away from the Current Probe.
5. Install the battery (IEC 6LR61) as shown in Figure 2. Arrange the battery leads so that they will not be pinched between the handle bottom and the battery cover.
6. Reinstall the battery cover and secure the screw.

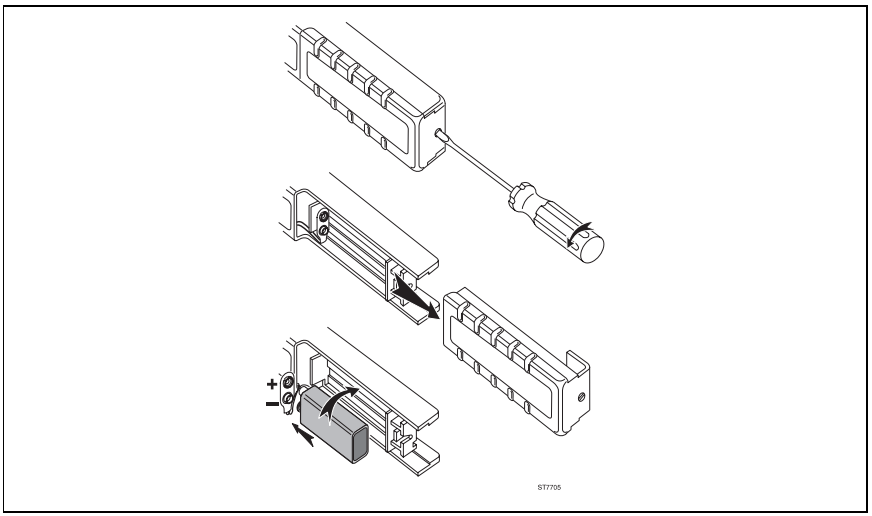

Figure 2. Installing the Battery

USING THE CURRENT PROBE SAFELY

ATTENTION

Carefully read the following safety information before attempting to operate or service the Current Probe.

- ⚠ Never use the probe on circuits rated higher than 600V in Installation Category II (CAT II) or 300V in Installation Category III (CAT III). (See "Safety Specifications".) Use extreme caution when clamping around uninsulated conductors or bus bars.
- Keep your fingers off the probe jaws.
- Check the magnetic mating surfaces of the probe jaws; these should be free of dust, dirt, rust, and other foreign matter.
- Do not use a probe that is cracked, damaged, or has a defective cable. Such probes should be made inoperative by taping the clamp shut to prevent operation.

In this Users Manual, a **WARNING** identifies conditions and actions that pose hazard(s) to the user. A **Caution** identifies conditions and actions that may damage the current probe. International electrical symbols used are explained below.

⎓	DC - Direct Current	⚠	Caution (see explanation in manual)
∿	AC - Alternating Current	⧈	Equipment protected throughout by DOUBLE INSULATION or REINFORCED INSULATION
⏚	Earth	♻	Recycling
CE	Conformité Européenne		

The 80i-110s is designed to meet the requirements of IEC Publication 1010 and other safety standards (see "Safety Specifications"). Follow all warnings to ensure safe operation.

Use of this equipment in a manner not specified herein may impair the protection provided by the equipment.

ELECTRICAL SPECIFICATIONS

All Electrical Specifications are valid at a temperature of 23 °C ±3 °C (73 °F ±5 °F).

Current Ranges:

0 to 10A dc or ac peak
0 to 100A dc or ac peak

Output Signals:

10A range: 100 mV/A
100A range: 10 mV/A

Working voltage (Clamps jaws to Ground):
600V ac rms on Installation Category II per IEC 1010-1 circuits.
300V ac rms on Installation Category III per IEC 1010-1 circuits.

Floating Voltage (Output cable and connector to Ground):
600V ac rms on Installation Category II per IEC 1010-1 circuits.
300V ac rms on Installation Category III per IEC 1010-1 circuits.

Basic Accuracy (DC to 1kHz):

Input Current (DC or AC peak)	Error (after zero check)	
	100 mV/A	10 mV/A
0 to 10A	<3% of reading +50 mA	-
0 to 40A	-	<4% of reading +50 mA
40 to 80A	-	<12% of reading +50 mA
80 to 100A	-	<15% of reading

Extended Accuracy:
For other frequencies, refer to the appropriate input current range and **add the error listed below to the "Basic Accuracy" error**.

Frequency	Additional Error	
	100 mV/A	10 mV/A
1 to 5 kHz	3%	3%
5 to 20 kHz	12%	12%
>20 kHz	not specified	not specified

Input Load Impedance (of host instrument):
>1 MΩ in parallel with up to 100 pF.

Useful Bandwidth (-3 dB):
0 to 100 kHz

Rise or Fall Time:
<4 μsec.

Output noise level:

10 mV/A	typ. 480 μV pk-pk
100 mV/A	typ. 3 mV pk-pk

Max. non destructive current:

0 to 2 kHz	140A peak
2 to 10 kHz	110A peak
10 to 20 kHz	70 A peak
20 to 50 kHz	30A peak
50 to 100 kHz	20A peak

Temperature coefficient:
2000 ppm/°C max. for temperature from 0 to 50 °C (32 to 132 °F)

GENERAL SPECIFICATIONS

Dimensions:
67 x 231 x 36 mm (2.6 x 9.1 x 1.4 inches)

Weight:
330g (11.6 oz.), battery included

Output Cable:
1.6 meters (63 inches)

Maximum Conductor Size:
∅ 11.8 mm (.46 inch)

Maximum Jaw Opening:
12.5 mm (.49 inch)

Temperature:
operating: 0 to 50°C (32 to 122°F)
nonoperating: -30 to 70°C (-22 to 158°F)

Relative Humidity (Operating):
0 to 85% (0 to 35°C; 32 to 95°F)
0 to 45% (35 to 50°C; 95 to 122°F)

Altitude:
operating: 0 to 2000 meters (0 to 6560 feet)
nonoperating: 0 to 12000 meters (0 to 40000 feet)

Demagnetize Probe:
Open and close the probe jaws several times

SAFETY SPECIFICATIONS

Designed to meet the requirements of IEC 1010 and CSA-C22.2 No. 1010.1:
Installation Category II, Working Voltage 600V, Pollution Degree 2,
Installation Category III, Working Voltage 300V, Pollution Degree 2

Installation (Overvoltage) Category II refers to local level, appliances, and portable equipment. Installation (Overvoltage) Category III refers to distribution level and fixed installation circuits inside a building electrical service entrance.

Designed to meet the requirements of UL3111-1, Protection Class II Double Insulation ⧈.

Meets requirement of EN 61010-1.

This product is in conformity with Electromagnetic Compatibility Directive 89/336/EEC, and low Voltage Directive 73/23/EEC.
This conformity is indicated by the symbol CE, i.e. “Conformité européenne”.

BATTERY INFORMATION

Battery:
9 volt, IEC 6LR61

Consumption:
8.6 mA typical
12 mA maximum

Service life:
55 hours typical, when Alkaline IEC 6LR61 is used
40 hours minimum, when Alkaline IEC 6LR61 is used

Battery indicator (ON): Green LED dims when battery voltage is below 6.5V

Overload indicator (OL): Red LED indicates that waveform or impulse is out of range

INSTRUMENT COMPATIBILITY

The 80i-110s is compatible with any Fluke ScopeMeter test tool, Power Harmonics Analyzer, Oscilloscope, Multimeter, or other voltage measurement device that has the following features:

- BNC input connector. A BNC-to-banana adapter (order PM9081/001 from Fluke) can also be used with standard inputs on a digital multimeter (DMM).
- Input accuracy of 2% or better to take full advantage of the accuracy of the probe.
- Input impedance of greater than or equal to 1 MΩ in parallel with a maximum of 100 pF.
- A passband of more than four times the frequency of the waveform to be measured.

USING THE CURRENT PROBE

To use the Current Probe, follow these instructions:

1. Connect the 80i-110s Current Probe to the desired input on the measuring instrument. When the ScopeMeter test tool or an oscilloscope is used, it must have DC coupled input. When you are using a digital multimeter, use the BNC-to-banana adapter (PM9081/001) to connect the probe to the input.
2. On the Current Probe, select the least sensitive range (10 mV/A). Ensure that the green ON-indicator lights. See Figure 4 for selector switch and green ON-indicator locations.
3. On the Current Probe, rotate the ZERO thumbwheel to adjust the probe reading to zero. See Figure 4 for the ZERO rotary knob location.
4. Select the appropriate probe sensitivity on your ScopeMeter test tool or oscilloscope.
5. Clamp the Current Probe around the conductor; be sure that the arrow marked on the jaw of the Current Probe points toward the correct orientation. (see Figure 3.)

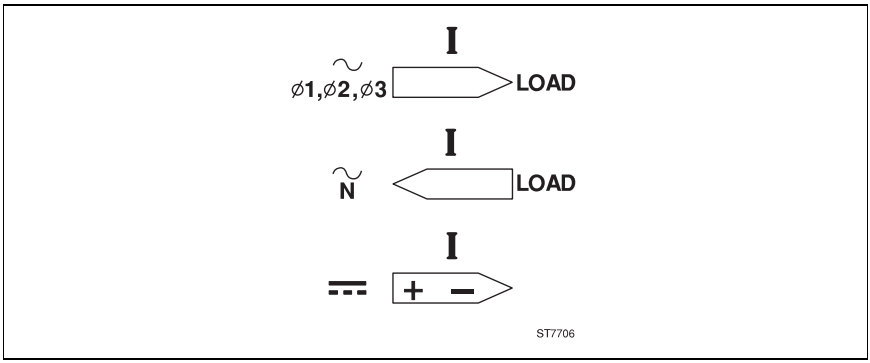

Figure 3. Orientation of the Current Probe

6. Observe the current value or waveform on your display or the current value readout on the multimeter.
7. On the ScopeMeter test tool, adjust the vertical range knob and time division knob for the best display.
8. If the red OL-indicator lights, the Current Probe is in overload mode.
9. At completion, be sure to set the range selection switch to OFF again.

A measuring setup using the Current Probe and a ScopeMeter test tool is shown in Figure 4.

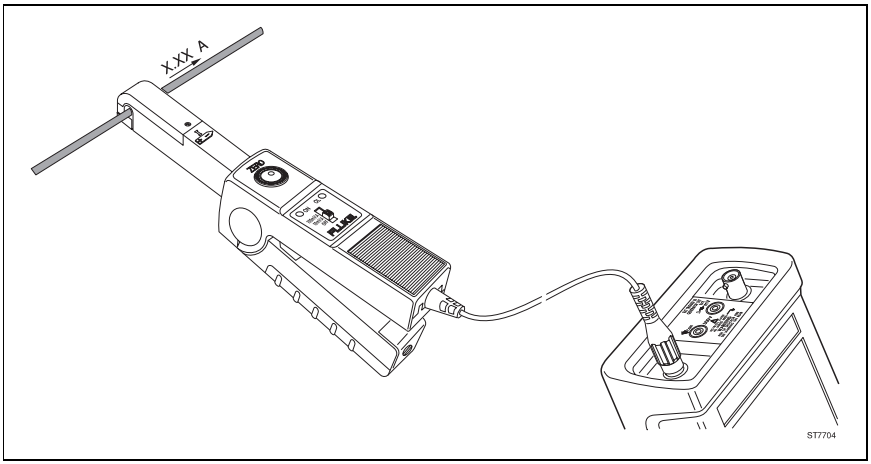

Figure 4. Measuring Setup

MEASUREMENT CONSIDERATIONS

Observe the following guidelines for positioning the Current Probe Jaws:

- Center the conductor inside the probe jaws.
- Make sure the probe is perpendicular to the conductor.
- Make sure that the arrow  marked on the jaw of the Current Probe points toward the correct direction.

Observe the following guidelines when making measurements:

- If possible, avoid measurements close to other current-carrying conductors.
- On the Current Probe, the 100 mV/A range offers the best accuracy.

MAINTENANCE

Before each use, assure continued safety by inspecting the probe. Look for cracks or missing portions of the probe housing and output cable insulating cover and for loose or weakened components. Pay particular attention to the insulation surrounding the probe jaws. If a probe fails this inspection, tape it shut to prevent unintended operation. To check probe performance, complete the "Performance Verification" procedure.

⚠ WARNING

THESE SERVICING INSTRUCTIONS ARE FOR USE BY QUALIFIED PERSONNEL ONLY. TO AVOID ELECTRIC SHOCK, DO NOT PERFORM ANY SERVICING PROCEDURES UNLESS YOU ARE QUALIFIED TO DO SO. READ THE INFORMATION TITLED "USING THE CURRENT PROBE SAFELY" AT THE BEGINNING OF THIS USERS MANUAL BEFORE PROCEEDING.

Repairs or servicing not covered in this Users Manual should be performed only at a Fluke Service Center. A probe under warranty will be promptly repaired or replaced (at Fluke's discretion) and returned at no charge.

CLEANING AND STORAGE

Periodically wipe the case with a damp cloth and detergent; do not use abrasives or solvents. Open the jaws and wipe the magnetic pole pieces with a lightly oiled cloth. Do not allow rust or corrosion to form on the magnetic core ends. If the probe is not used for periods of longer than 60 days, the battery should be removed and stored separately.

PERFORMANCE VERIFICATION

Verify probe accuracy with the test setups shown in Figure 5. Required test equipment is defined in Table 1. Toroid coil construction is illustrated in Figure 6.

Do the following to verify the probe accuracy:

1. Set up Connection A.
2. Make the checks called for in Table 2.
3. Disconnect Connection A at the 5100B.
4. Set up Connection B
5. Make the checks called for in Table 3.

Table 1. Required Test Equipment

REQUIRED	RECOMMENDED MODEL
AC/DC Calibrator Transconductance Amplifier Digital Multimeter (DMM) Small insulated screwdriver Banana-to-BNC Adapter 10-Turn Toroid Coil	Fluke Model 5100B Fluke Model 5220A Fluke Model 8050A Spectrol Fluke Model PM9081/001 (see Figure 6.)

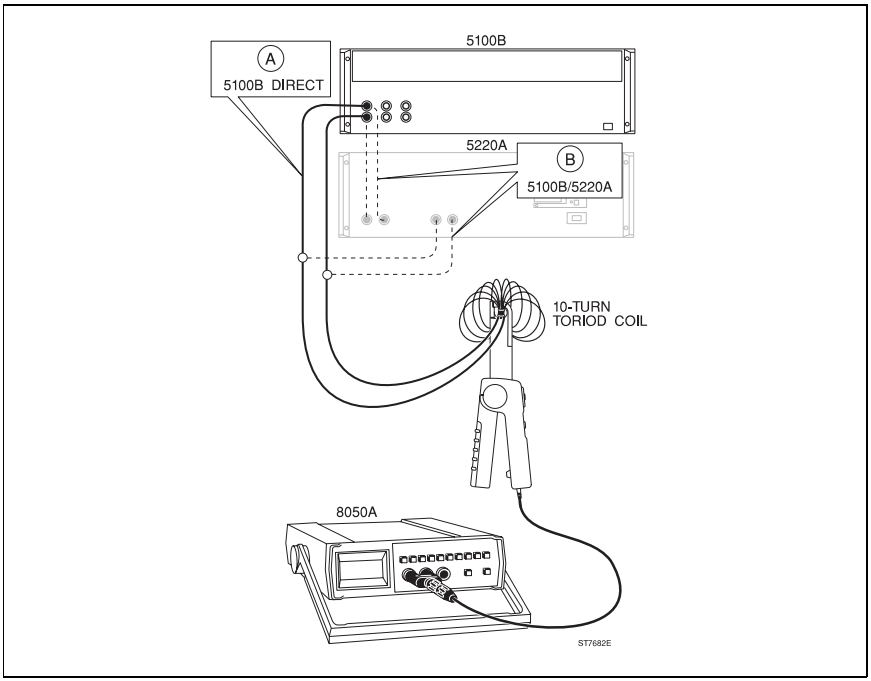

Figure 5. Performance Test and Calibration Setup

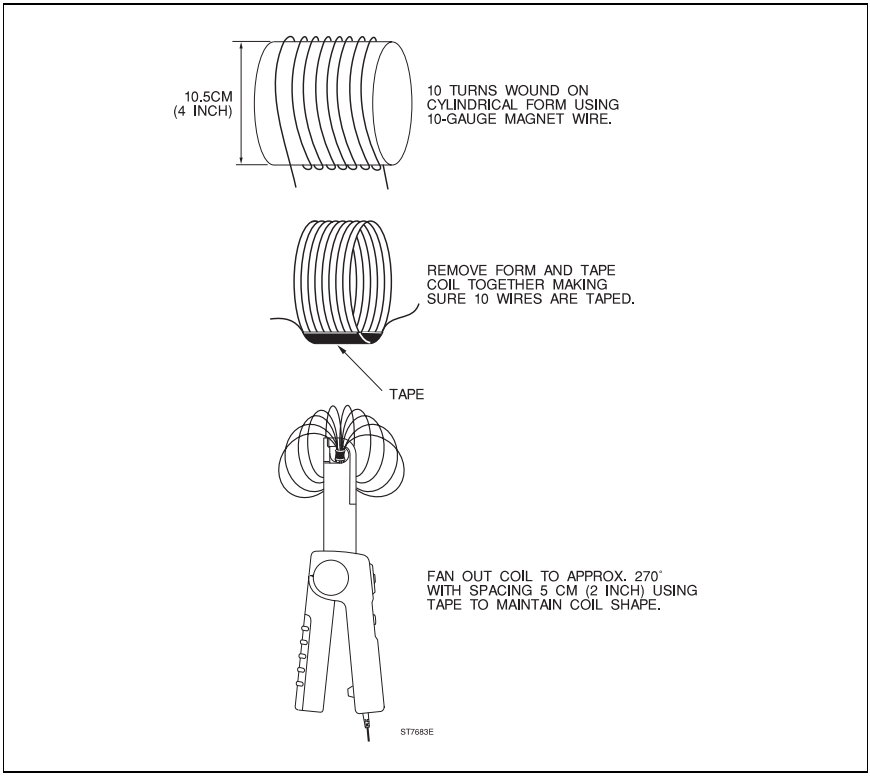

Figure 6. Toroid Coil Construction

Table 2. Performance Test Points (5100B Direct)

Current range 0 to 10A

DC Measurement:

5100B SETTINGS	DC AMPS MEASURED	LOW LIMIT OUTPUT	HIGH LIMIT OUTPUT
0.1A 0.5A 0.9A	1A 5A 9A	92 mV 480 mV 868 mV	108 mV 520 mV 932 mV

AC Measurement:

5100B SETTINGS	RMS AMPS MEASURED	LOW LIMIT OUTPUT	HIGH LIMIT OUTPUT
0.1A, 60 Hz	1A	92 mV	108 mV
0.3A, 400 Hz	3A	286 mV	314 mV
0.5A, 2 kHz	5A	465 mV	535 mV
0.6A, 4 kHz	6A	559 mV	641 mV

Table 3. Performance Test Points (5100B and 5220A)

Currrent Range 0 to 100A

DC Measurement:

5100B SETTINGS	DC AMPS MEASURED	LOW LIMIT OUTPUT	HIGH LIMIT OUTPUT
1V	10A	95.5 mV	104.5 mV
3V	30A	287.5 mV	312.5 mV
5V	50A	439.5 mV	560.5 mV
7V	70A	615.5 mV	784.5 mV
9V	90A	765.0 mV	1035.0 mV

AC Measurement:

5100B SETTINGS	RMS AMPS MEASURED	LOW LIMIT OUTPUT	HIGH LIMIT OUTPUT
1V, 5 kHz	10A	92.5 mV	107.5 mV
2V, 5 kHz	20A	185.5 mV	214.5 mV
3V, 2 kHz	30A	254.5 mV	345.5 mV
5V, 400 Hz	50A	439.5 mV	560.5 mV
7V, 60 Hz	70A	595.0 mV	805.0 mV

IF YOUR CURRENT PROBE DOES NOT WORK

If the 80i-110s does not perform properly, use the following steps to help isolate the problem:

1. Test the battery: be sure that the green ON-indicator lights when you select the 10 mV/A range or the 100 mV/A range.
2. Inspect the jaw mating surface for cleanliness. If any foreign material is present, the jaws will not close properly and errors will result.
3. Verify that the probe is zeroed properly. For zeroing be sure that the ScopeMeter test tool or oscilloscope is DC-coupled.
4. Verify that the function selection on the ScopeMeter test tool or oscilloscope is correct, i.e., the display vertical resolution is not too low or too high.

REPLACEMENT PARTS

To order replacement parts in the USA, call 1-800-526-4731. To order outside the USA, contact the nearest Service Center. Use the following part numbers:

	Description	Part Number
•	9 Volt Battery (IEC 6LR61)	4822 138 10116
•	Battery Cover	5322 447 92322
•	Users Manual	4822 872 00631
•	Quick Reference Card	4822 872 00633

Order Fluke Part PM9081/001 BNC-to-Banana Adapter to use the Current Probe with a digital multimeter.