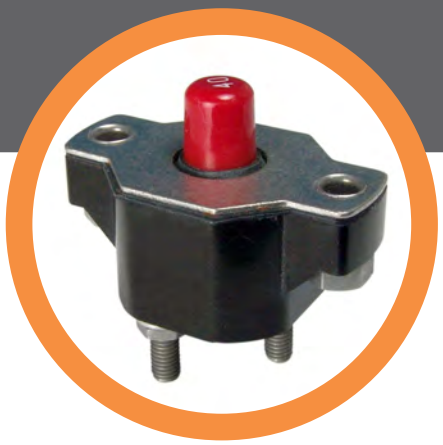

KLIXON® | 7851 & 7854 Series

12.5 to 60 Amp Commercial Thermal Circuit Breaker

FEATURES

- 30VDC or 120VAC, 12.5 to 60 Amps
- Sealed assemblies, manual and automatic reset options
- Ignition protected SAE J1171
- Weatherproof SAE J553
- UL Recognized E36869

DESCRIPTION

The KLIXON® 7851 and 7854 series thermal breakers were designed to protect wiring and meet the harshest environmental requirements. The 7851 and 7854 series closed construction circuit breakers are weatherproof sealed for protection against moisture, dust, grease, fuel vapors and other harsh environments. The 7851 and 7854 series breakers are compact, lightweight and designed to interrupt short circuits or overloads, and combine trip-free protection with fast response time. Typical applications are protection of wire cable of accessory circuits, equipment and battery protection in construction and off-road equipment, marine, recreational vehicles (RV's), mining, agricultural equipment and electric (hybrid) vehicles.

ORDERING INFORMATION

X – X – X – X

Configuration
7851 = Manual, sealed
7854 = Auto, sealed

Stud Length (approx)
18 = 0.310" for 7851 & 7854
37 = 0.455" for 7851
26 = 0.455" for 7854
13 = 0.610" for 7851
15 = 0.610" for 7854

Amp Rating
(12.5, 15, 17.5, 20, 25, 30
35, 40, 50, 60)

Mounting Nuts
= leave blank for none
I = optional mounting nuts

PERFORMANCE CHARACTERISTICS

Calibration : 200% rated current, 77°F (25°C)	12.5 to 60 amps : 5 to 55 seconds
Ultimate Trip At 77°F (25°C)	Must hold 100%, Must trip 135%
Endurance	Per SAE J553
Interrupt Current Capacity	Per SAE J553 and ABYC E-11
Vibration	10G MIL-STD-202 Method 204, Condition A
Salt Spray	MIL-STD-202 Method 101D
Dielectric Strength	MIL-STD-202 Method 301, 1500VAC min
Insulation Resistance	MIL-STD-202 Method 302, Condition B, 100MΩ min
Weight (with mounting nuts)	7851 : 54 grams max 7854 : 49 grams max

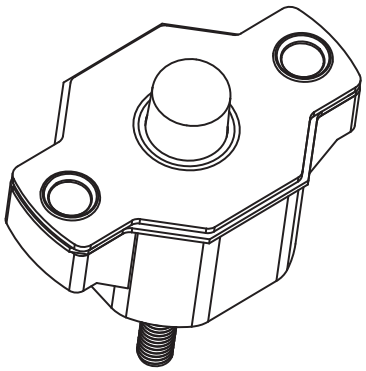

TRIP CURVE - Approximate Time, Current Characteristics At 77°F (25°C)

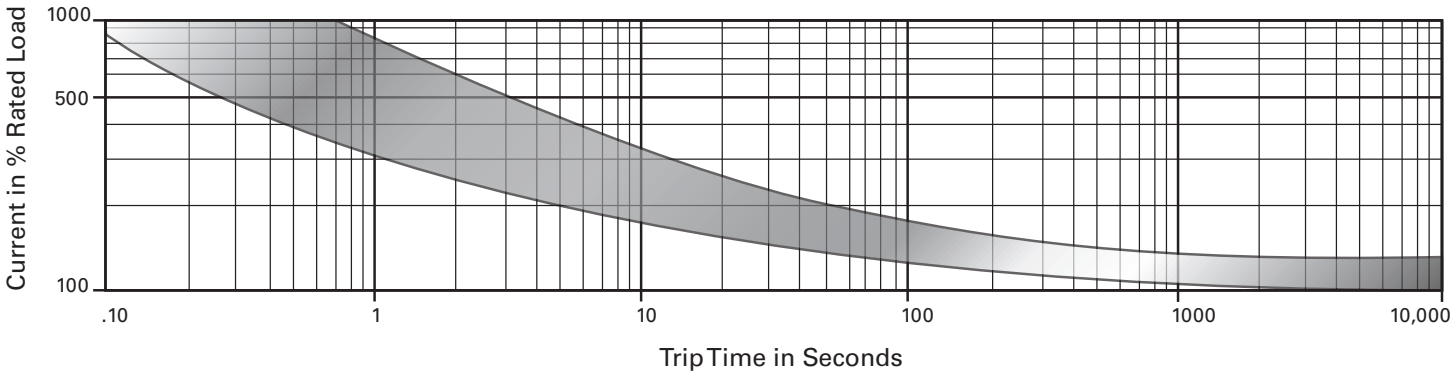

DIMENSIONS

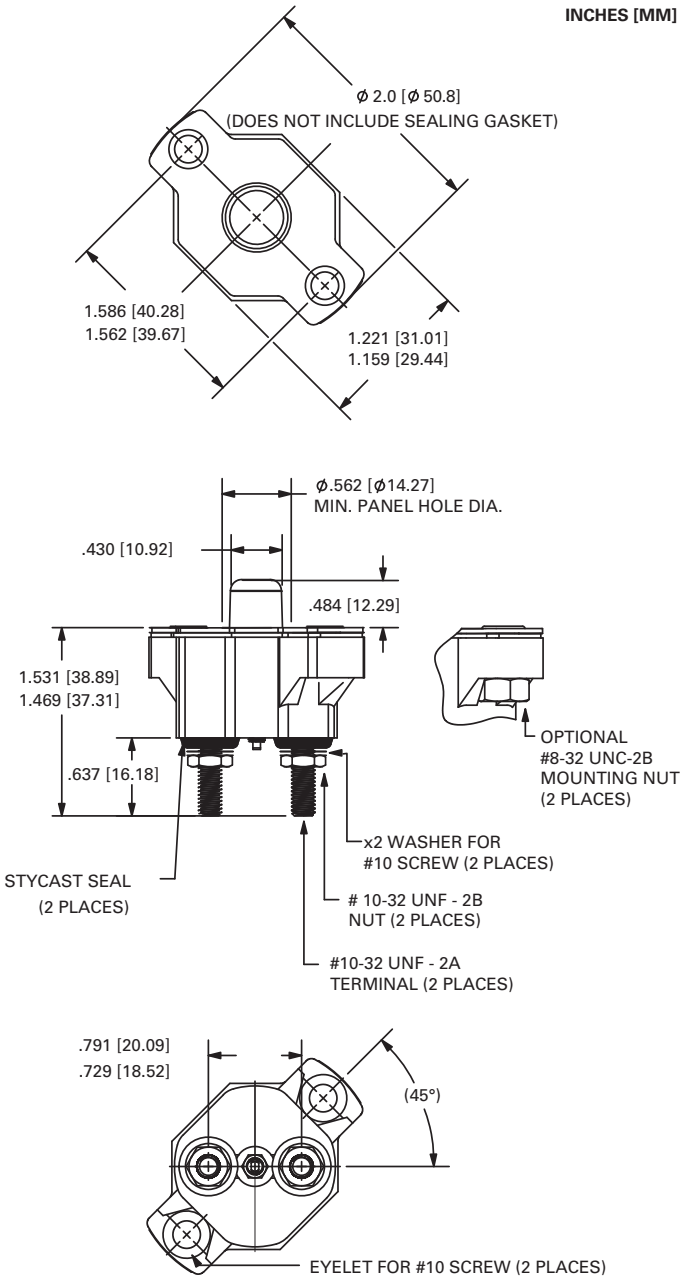

DERATING CURVE

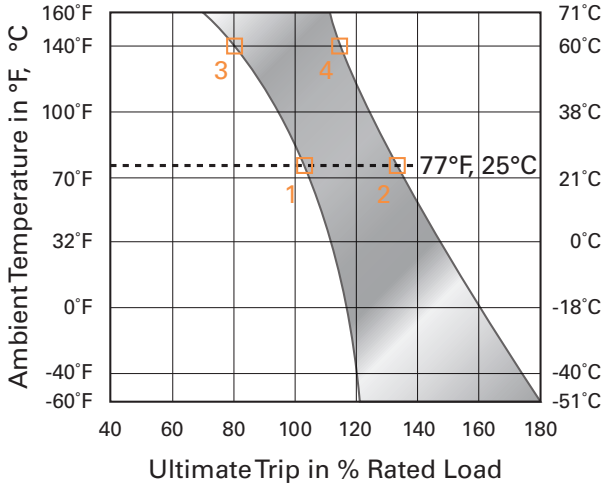

Performance characteristics are based on room temperature (77°F, 25°C). Consult Derating curve for ambient temperatures significantly higher or lower than standard room temperature.

Example: At 77°F (25°C) the device is calibrated to hold at 100% of rated current (1) and trip at 135% of rated current (2). At 140°F (60°C), the same device will hold at approximately 78% of rated current (3), and trip at approximately 115% of rated current (4).

BUSINESS CENTER

http://www.sensata.com/

Sensata Technologies Inc.
529 Pleasant Street
Attleboro, MA 02703, USA
Phone: +1 508-236-3800
Fax: +1 508-236-2349

Sensata Technologies

The World Depends on Sensors and Controls

©2013 Sensata Technologies, Inc. All rights reserved worldwide. Printed in USA, revised April 2013.

Important Notice: Sensata Technologies reserves the right to make changes to, or to discontinue, any product or service identified in this publication without notice. Before placing orders, users should obtain the latest version of the relevant information to verify that the information being relied upon is current.

Sensata Technologies assumes no responsibility for customers' product designs or applications. Users must determine the suitability of the Sensata device described in this publication for their application, including the level of reliability required. Many factors beyond Sensata's control can affect the use and performance of a Sensata product in a particular application, including the conditions under which the product is used and the time and environmental conditions in which the product is expected to perform. As these factors are uniquely within the user's knowledge and control, it is essential that the user evaluate the Sensata product to determine whether it is fit for a particular purpose and suitable for the user's application.

Sensata Technologies products are sold subject to Sensata's Terms and Conditions of Sale which can be found at: www.sensata.com/terms.htm